Single-phase Current Relay

K8AK-AS

Ideal for Current Monitoring for Industrial Facilities and Equipment.

- Monitor for overcurrents or undercurrents.
- Use commercially available CTs (CT current on secondary side: 0 to 1 A or 0 to 5 A).
- Manual resetting and automatically resetting supported by one Relay.
- Startup lock and operating time can be set separately.
- One SPDT output relay, 5 A at 250 VAC (resistive load).
- Output relay can be switched between normally open and normally closed.
- Output status can be monitored using LED indicator.
- Inputs are isolated from the power supply.

Refer to *Safety Precautions* on page 10.
Refer to page 9 for commonly asked questions.

For the most recent information on models that have been certified for safety standards, refer to your OMRON website.

Ordering Information

List of Models

Setting range	Power supply voltage	Model
2 to 20 mA AC/DC, 10 to 100 mA AC/DC, 50 to 500 mA AC/DC	24 VAC/DC	**K8AK-AS1 24 VAC/DC**
	100 to 240 VAC	**K8AK-AS1 100-240 VAC**
0.1 to 1 A AC/DC, 0.5 to 5 A AC/DC, 0.8 to 8 A AC/DC	24 VAC/DC	**K8AK-AS2 24 VAC/DC**
	100 to 240 VAC	**K8AK-AS2 100-240 VAC**
10 to 100 A AC*, 20 to 200 A AC*	24 VAC/DC	**K8AK-AS3 24 VAC/DC**
	100 to 240 VAC	**K8AK-AS3 100-240 VAC**

*1 The K8AK-AS3 is designed to be used in combination with an OMRON K8AC-CT200L Current Transformer (CT). (Direct input is not possible.)

Accessory (Order Separately)

●OMRON CT

Appearance	Input range	Applicable Relay	Model
	10 to 100 A AC, 20 to 200 A AC	K8AK-AS3	**K8AC-CT200L**

●Commercially Available CTs*

Appearance	CT current on secondary side	Applicable Relay
	0 to 1 A AC, 0 to 5 A AC	K8AK-AS2

* If you use a commercially available CT, do not exceed the overload capacity of the K8AK-AS2.

K8AK-AS

Ratings and Specifications

Input Range

Model	Range*1	Connection terminal	Setting range	Input impedance	Input type	Overload capacity
K8AK-AS1	0 to 20 mA AC/DC	I1-COM	2 to 20 mA AC/DC, 10 to 100 mA AC/DC, 50 to 500 mA AC/DC	Approx. 5 Ω	Direct input	Continuous input at 120% of maximum input 1 s at 150%
	0 to 100 mA AC/DC	I2-COM		Approx. 1 Ω	Direct input	
	0 to 500 mA AC/DC	I3-COM		Approx. 0.2 Ω	Direct input	
K8AK-AS2	0 to 1 A AC/DC	I1-COM	0.1 to 1 A AC/DC, 0.5 to 5 A AC/DC, 0.8 to 8 A AC/DC	Approx. 0.12 Ω	Direct input or commercially available CT	
	0 to 5 A AC/DC	I2-COM		Approx. 0.02 Ω		
	0 to 8 A AC/DC	I3-COM		Approx. 0.02 Ω	Direct input	
K8AK-AS3	0 to 100 A AC	I2-COM	10 to 100 A AC*2, 20 to 200 A AC*2	---	OMRON CT	Continuous input at 120% with an OMRON CT (K8AC-CT200L). 30 s at 200% 1 s at 600% * CT capacity on primary side.
	0 to 200 A AC	I3-COM		---	OMRON CT	

*1 The range is selected using connected terminals.
*2 The K8AK-AS3 is designed to be used in combination with an OMRON K8AC-CT200L Current Transformer (CT). (Direct input is not possible.)

Ratings

Power supply voltage	**Isolated power supply**	24 VAC/DC 100 to 240 VAC
Power consumption		24 VAC/DC: 2.0 VA/1.1 W max. 100 to 240 VAC: 4.6 VA max.
Operating value setting range (SV)		10% to 100% of the maximum value of the setting range K8AK-AS1: 2 to 20 mA AC/DC 10 to 100 mA AC/DC 50 to 500 mA AC/DC K8AK-AS2: 0.1 to 1 A AC/DC (Compatible with commercially available CTs.) 0.5 to 5 A AC/DC (Compatible with commercially available CTs.) 0.8 to 8 A AC/DC K8AK-AS3: When used with the OMRON CT (K8AC-CT200L). 10 to 100 A AC 20 to 200 A AC
Operating value		100% operation at set value
Reset value setting range (HYS.)		5% to 50% of operating value
Reset method		Manual reset/automatic reset (switchable) **Note:** Manual reset: Turn OFF power supply for 1 s or longer.
Operating time setting range (T)		0.1 to 30 s
Startup lock time setting range (LOCK) **Note:** Enabled only for overcurrent operation.		0 to 30 s (The startup lock timer starts when the input has reached approximately 30% or more of the set value.) **Note:** Enabled only for overcurrent operation.
Indicators		Power (PWR): Green, Relay output (RY): Yellow, Alarm outputs (ALM): Red
Input impedance		Refer to *Input Range* on this page.
Output relays		One SPDT relay (NO/NC switched using DIP switch.)
Output relay ratings		Rated load Resistive load 5 A at 250 VAC 5 A at 30 VDC Maximum switching capacity: 1,250 VA, 150 W Minimum load: 5 VDC, 10 mA (reference values) Mechanical life: 10 million operations min. Electrical life: 5 A at 250 VAC or 30 VDC: 50,000 operations 3 A at 250 VAC/30 VDC:100,000 operations
Ambient operating temperature		–20 to 60°C (with no condensation or icing)
Storage temperature		–25 to 65°C (with no condensation or icing)
Ambient operating humidity		25% to 85% (with no condensation)
Storage humidity		25% to 85% (with no condensation)
Altitude		2,000 m max.
Terminal screw tightening torque		0.49 to 0.59 N·m
Terminal wiring method		Recommended wire Solid wire: 2.5 mm^2 Twisted wires: AWG16, AWG18 **Note: 1.** Ferrules with insulating sleeves must be used with twisted wires. **2.** Two wires can be twisted together. Recommended ferrules AI 1,5-8BK (for AWG16) manufactured by Phoenix Contact AI 1-8RD (for AWG18) manufactured by Phoenix Contact AI 0,75-8GY (for AWG18) manufactured by Phoenix Contact
Case color		N1.5
Case material		PC and ABS, UL 94 V-0

Weight	Approx. 150 g
Mounting	Mounts to DIN Track
Dimensions	22.5 × 90 × 100 mm (W×H×D)

Specifications

Allowable operating voltage range		85% to 110% of power supply voltage
Allowable operating frequency range		50/60 Hz ±5 Hz
Input frequency range		K8AK-AS1 and K8AK-AS2: DC input or AC input (45 to 65 Hz) K8AK-AS3: AC input (45 to 65 Hz)
Overload capacity		K8AK-AS1 and K8AK-AS2: Continuous input at 120% of maximum input, 1 s at 150% K8AK-AS3: Continuous input at 120%, 30 s at 200%, and 1 s at 600% with an OMRON CT (K8AC-CT200L) **Note:** Overload capacity of primary side of CT.
Repeat error	**Operating value**	±0.5% full scale (at 25°C and 65% humidity, rated power supply voltage, DC or 50/60 Hz sine wave input)
	Operating time	±50 ms (at 25°C and 65% humidity, rated power supply voltage)
Applicable standards	**Conforming standards**	EN 60947-5-1 Installation environment (pollution level 2, installation category III)
	EMC	EN 60947-5-1
	Safety standards	UL 508 (Recognition), Korean Radio Waves Act (Act 10564)*, CSA: C22.2 No.14*, CCC: GB/T 14048.5*
Insulation resistance		20 MΩ min. Between external terminals and case Between power supply terminals and input terminals Between power supply terminals and output terminals Between input terminals and output terminals
Dielectric strength		2,000 VAC for one minute Between external terminals and case Between power supply terminals and input terminals Between power supply terminals and output terminals Between input terminals and output terminals
Noise immunity		1,500 V power supply terminal common/normal mode Square-wave noise of ±1 μs/100 ns pulse width with 1-ns rise time
Vibration resistance		Frequency 10 to 55 Hz, 0.35-mm single amplitude 10 sweeps of 5 min each in X, Y, and Z directions
Shock resistance		100 m/s^2, 3 times each in 6 directions along 3 axes
Degree of protection		Terminals: IP20

* Products manufactured in Indonesia (for the North America, Southeast Asia, and India regions) do not carry CSA, KC, or CCC certification. Applicable products can be identified by the suffix "HI" at the end of the Lot No.

Individual Packaging Label

Product Label

●Relationship of Mounting Distance between K8AK-AS Relays and Input Current (Reference Values)

The following diagram shows the relationship between the mounting distances and the input current. If the relay is used with an input current that exceeds these values, the temperature of the K8AK may rise and shorten the life of the internal components.

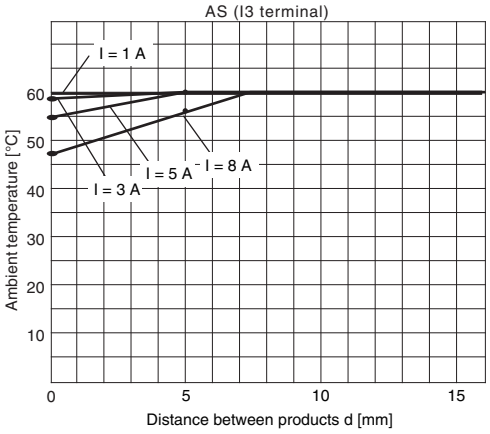

Test method

Sample: K8AK-AS
Applied voltage: 240 VAC
Mounting distances: 0, 5, and 10 mm min.

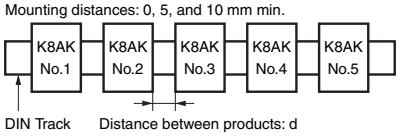

Connections

Terminal Diagram

K8AK-AS1 100-240VAC
(1) (2)

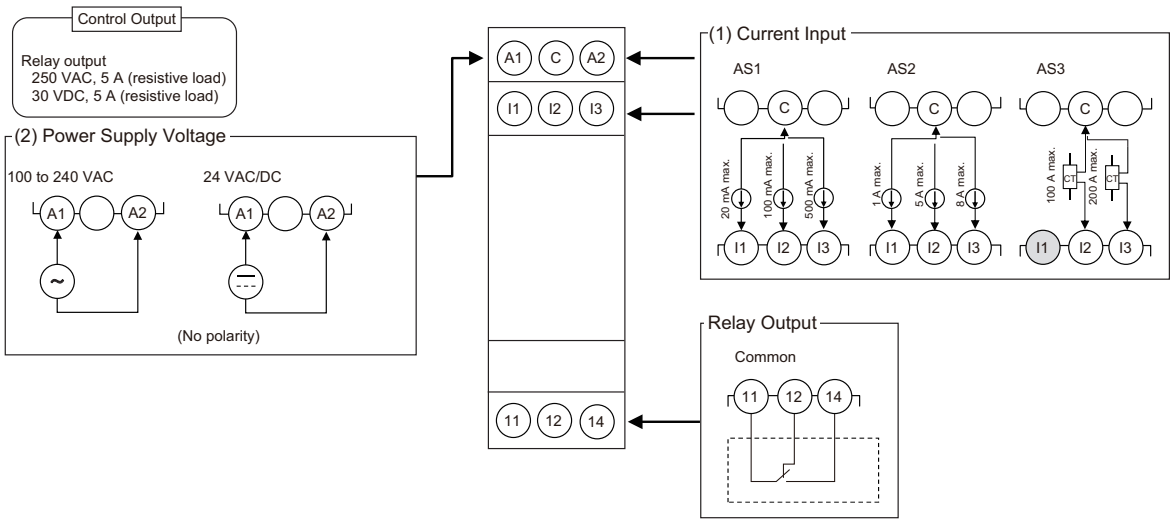

Note: 1. Do not connect anything to terminals that are shaded in gray.
2. There is no polarity for the DC power supply input.
3. For the current input, you can input only from the C terminal and one other terminal.
4. Refer to *Setting Ranges and Wiring Connections* on the I1, I2, and I3 current input terminals.
5. Use the recommended ferrules if you use twisted wires.
6. The K8AK-AS3 is designed to be used in combination with the OMRON K8AC-CT200L Current Transformer (CT).

Wiring Example

Directly Inputting a Current

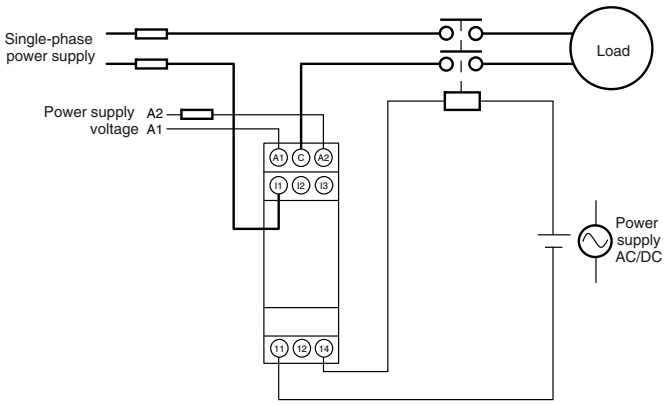

Using a CT

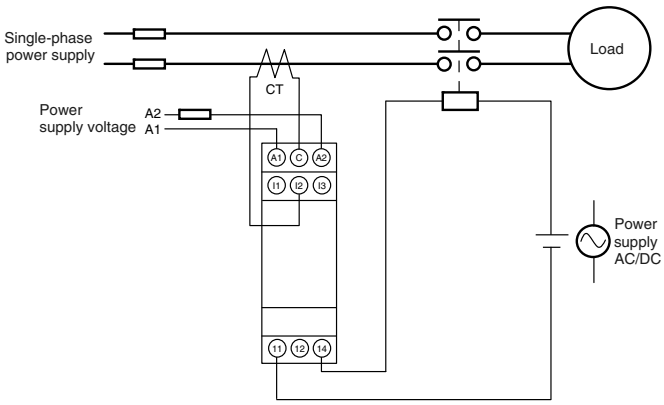

Timing Charts

●Overcurrent Operation Diagram (Output Relay Drive Method: Normally Open)

DIP switch setting: SW3 OFF, SW4 OFF

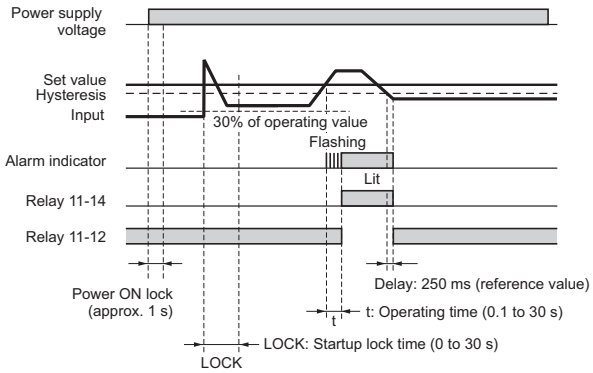

●Undercurrent Operation Diagram (Output Relay Drive Method: Normally Closed)

DIP switch setting: SW3 ON, SW4 ON

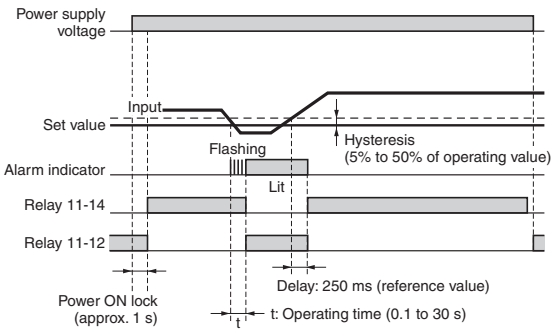

Nomenclature

Front

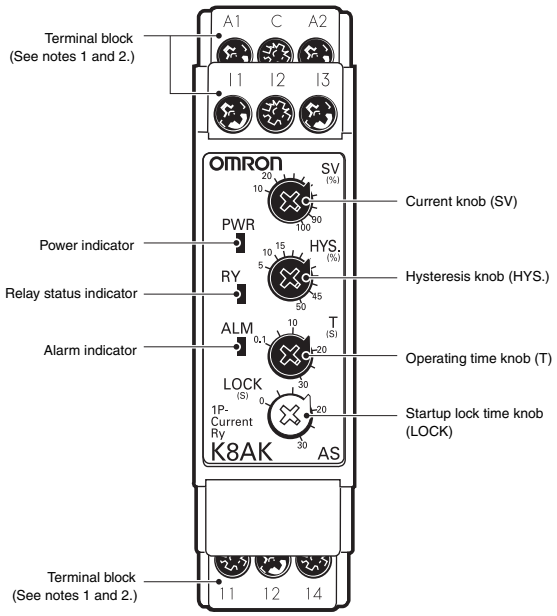

●Indicators

Item	Meaning
Power indicator (PWR: Green)	Lit when power is being supplied.
Relay status indicator (RY: Yellow)	Lit when relay is operating.
Alarm indicator (ALM: Red)	Lit when there is an overcurrent or undercurrent. The indicator flashes to indicate the error status after the input has exceeded the set value while the operating time is being clocked.

●Setting Knobs

Item	Usage
Current knob (SV)	Used to set the current to 10% to 100% of maximum setting range.
Hysteresis knob (HYS.)	Used to set the rest value to 5% to 50% of the operating value.
Operating time knob (T)	Used to set the operating time to 0.1 to 30 s.
Startup lock time knob (LOCK)	Used to set the startup lock time to 0 to 30 s.

Note: 1. Use either a solid wire of 2.5 mm^2 maximum or a ferrule with insulating sleeve for the terminal connection.
The length of the exposed current-carrying part inserted into the terminal must be 8 mm or less to maintain dielectric strength after connection.

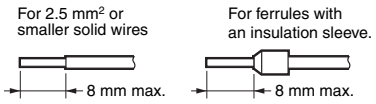

Recommended ferrules
Phoenix Contact
- AI 1,5-8BK (for AWG16)
- AI 1-8RD (for AWG18)
- AI 0,75-8GY (for AWG18)

2. Tightening torque: 0.49 to 0.59 N·m
3. The terminal screw is a Pozidriv screw.

Operation Methods

Setting Ranges and Wiring Connections

Model	Setting range	Input type	Wiring connections
K8AK-AS1	2 to 20 mA AC/DC	Direct input	I1-COM
	10 to 100 mA AC/DC	Direct input	I2-COM
	50 to 500 mA AC/DC	Direct input	I3-COM
K8AK-AS2	0.1 to 1 A AC/DC	Direct input or commercially available CT	I1-COM
	0.5 to 5 A AC/DC		I2-COM
	0.8 to 8 A AC/DC	Direct input	I3-COM
K8AK-AS3	10 to 100 A AC*	OMRON CT	I2-COM
	20 to 200 A AC*	OMRON CT	I3-COM

Note: The DC input terminals have no polarity.
* The K8AK-AS3 is designed to be used in combination with the OMRON K8AC-CT200L Current Transformer (CT). (Direct input is not possible.)

Connections

●Input

Connect the input between the I1-COM, I2-COM, or I3-COM terminals, according to the input current. Malfunctions may occur if the input is connected to unused terminals and the Unit will not operate correctly.
Terminal I1 is not used by the K8AK-AS3.
If using the OMRON K8AC-CT200L CT, connect to terminals k and l on the K8AC-CT200L. (Terminals kt and lt are not used.)

●Power Supply

Connect the power supply to terminals A1 and A2.

●Outputs

Terminals 11, 12, and 14 are the output terminals (SPDT) for overvoltage.

Note: Use the recommended ferrules if using twisted wires.

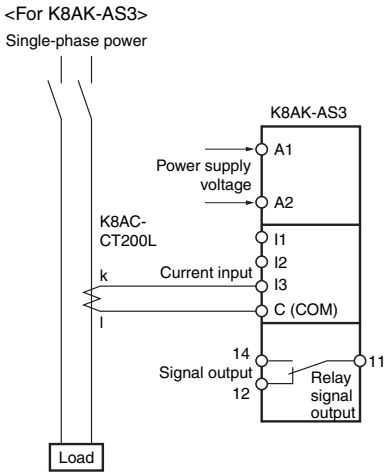

DIP Switch Settings

The resetting method, relay drive method, and operating mode are set using the DIP switch located on the bottom of the Unit.
K8AK-AS□ does not use SW1.

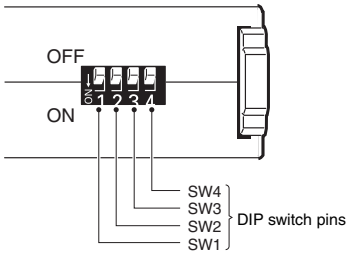

●DIP Switch Functions

Pin	OFF ● ↑ / ON ○ ↓	1 (OFF / ON)	2	3	4
Resetting method	Manual reset	Not used.	●	---	---
	Automatic reset		○	---	---
Relay drive method	Normally open		---	●	---
	Normally closed		---	○	---
Operating mode	Overcurrent		---	---	●
	Undercurrent		---	---	○

Note: All pins are set to OFF by default.

Setting Method

●Setting Current

The current knob (SV) is used to set the current.
The current can be set to 10% to 100% of the maximum setting range.
Turn the knob while there is an input to the input terminals until the alarm indicator flashes (when the set value and the input have reached the same level.)
Use this as a guide to set the current.
The maximum setting range will differ depending on the model and the input terminal.
Example: K8AK-AS3 Using Input Terminals I3-COM
The maximum setting range will be 200 A AC and the setting range will be 20 to 200 A.

●Hysteresis

Hysteresis is set using the hysteresis knob (HYS.)
The setting range is 5 to 50% of the operating value.
Example: Maximum of 200 A AC, Current Set Value (SV) of 50%, and Overcurrent Operation
Operation will be at 100 A and resetting at 90 A when the hysteresis (HYS.) is set to 10%.

●Operating Time

The operating time is set using the operating time knob (T).
The operating time can be set to between 0.1 and 30 s.
If the input current exceeds (drops lower than) the set value, the alarm indicator will start flashing for the set period and then stay lit.

●Startup Lock Time

The startup lock time is set using the startup lock time knob (LOCK).
The startup lock time can be set to between 0 and 30 s.
The startup lock time will start when the input current reaches 30% or more of the set value.
Use startup lock time to prevent unwanted operation, e.g., as a result of inrush current.
Note: Enabled only for overcurrent operation.

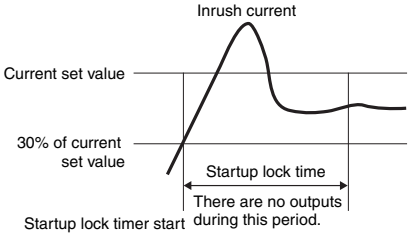

Dimensions

(Unit: mm)

Single-phase Current Relays

K8AK-AS1
K8AK-AS2
K8AK-AS3

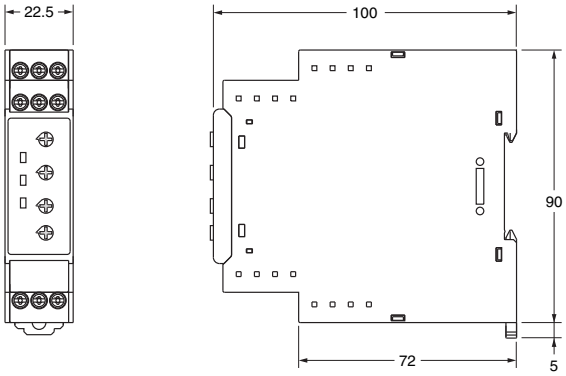

OMRON CT

K8AC-CT200L

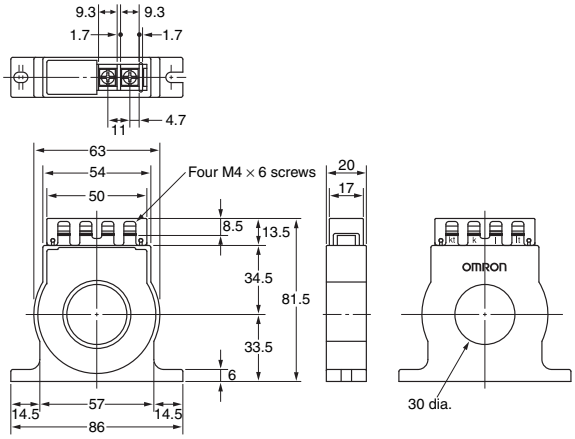

Mounting Hole Dimensions

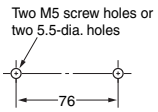

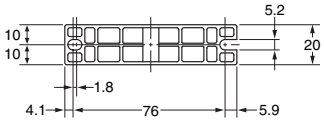

Note: The OMRON Current Transformer (CT) is designed to be used with the K8AK-AS3. Use terminals k and l for connections. (Terminals kt and lt are not used.)

Optional Parts for DIN Track Mounting

●DIN Tracks

PFP-100N
PFP-50N

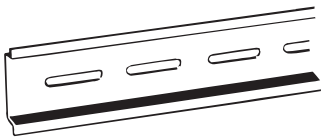

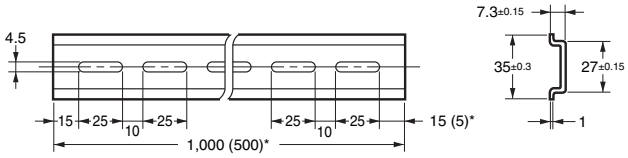

*Dimensions in parentheses are for the PFP-50N.

Questions and Answers

Q **Checking Operation**

A Overcurrents
Gradually increase the input from 80% of the set value.
The input will equal the operating value when the input exceeds the set value and the alarm indicator starts flashing.
Operation can be checked by the relay outputs that will start after the operating time has passed.
Undercurrent
Gradually decrease the input from 120% of the setting and check the operation using the same method as for overcurrent.

Example: Overcurrent Operating Mode, Normally Open Relay Drive, and an Operating Time of 5 s

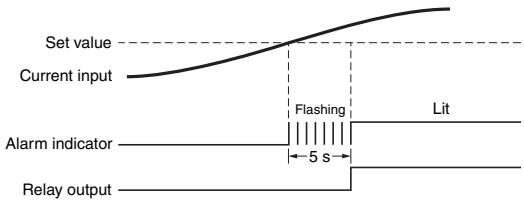

Connection Diagram

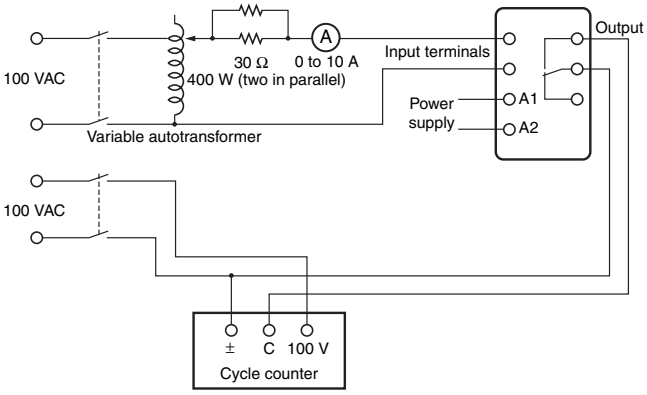

Q **How to Measure the Operating Time**

A Overcurrent
Change the input suddenly from 0% to 120% of the set value and measure the time until the Unit operates.
Undercurrent
Change the input suddenly from 120% to 0% of the set value and measure the time until the Unit operates.

Q **Monitoring Switch-mode Power Supplies**

A Switch-mode Power Supplies cannot be monitored. In circuits with a capacitor input, including switch-mode power supplies, the input capacitor recharge current flows in pulse form as the load current. The K8AK-AS□ has a built-in filter as a countermeasure against high frequencies and cannot be used to remove pulse current.

Q **Can a motor with a rated current of 5 A be monitored using the K8AK? Are there any application precautions?**

A The K8AK-AS1 and K8AK-AS2 cannot be used with motor loads. Use the K8AK-AS3 in combination with the K8AC-CT200L Current Transformer (CT). With motor loads, the startup current and stall current will cause a current of many times the rated current to flow. Refer to the following figure for information on the motor startup current.

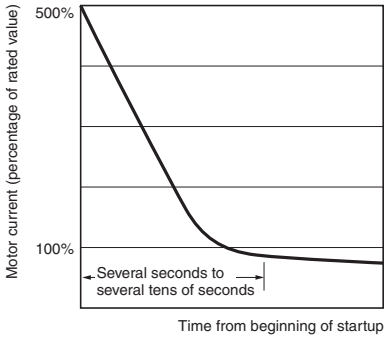

For a motor with a rating of 5 A, the startup current will be approximately 30 A. The startup current will exceed the overload capacity (rating: 150% for 1 s) of the K8AK-AS1 and K8AK-AS2 and result in failure of the Relay.
To monitor the motor load, use the K8AK-AS3. (Overload capacity: 120% of rating for continuous load, 200% of rating for 30 s, and 600% of rating for 1 s).
The K8AK-AS3 has a large input range. Pass the conductors multiple times through the special CT.

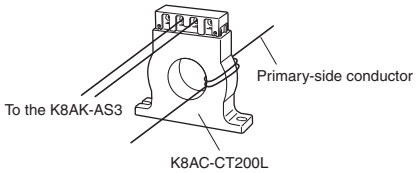

Concept behind Passing Conductor through the CT When Using the K8AK-AS3

Example: Monitoring Overload of a Motor with a Rated Current of 5 A

K8AK set value:
Overcurrent detection, operating value setting: 25%, operating time: 0.1 s
Startup lock timer: 0.1 to 30 s (Set the timer according to the duration of the startup current.)

The setting range for the K8AK-AS3 is 10% to 100% of the rated current (i.e., 10 to 100 A). Pass the conductors through the CT five times so that at least 10 A of current flows. The input current to the K8AK will be 25 A (i.e., 5 A x 5 loops).
If a startup current of six times the rated current is generated, it will be 150 A (i.e., 25 A x 6). The overload capacity for the K8AK-AS3 is 200% of the rating for 30 s. The Relay will not fail even if the startup current continues for 30 s, and it is possible to perform overload detection.

Safety Precautions

Be sure to read the precautions for all models in the website at the following URL: http://www.ia.omron.com/.

Warning Indications

CAUTION	Indicates a potentially hazardous situation which, if not avoided, may result in minor or moderate injury or in property damage.
Precautions for Safe Use	Supplementary comments on what to do or avoid doing, to use the product safely.
Precautions for Correct Use	Supplementary comments on what to do or avoid doing, to prevent failure to operate, malfunction, or undesirable effects on product performance.

Meaning of Product Safety Symbols

	Used to warn of the risk of electric shock under specific conditions.
	Used for general prohibitions for which there is no specific symbol.
	Used to indicate prohibition when there is a risk of minor injury from electrical shock or other source if the product is disassembled.
	Used for general mandatory action precautions for which there is no specified symbol.

CAUTION

Electrical shock may cause minor injury.
Do not touch terminals while electricity is being supplied.

There is a risk of minor electrical shock, fire, or device failure. Do not allow any pieces of metal, conductors, or cutting chips that occur during the installation process to enter the product.

Explosions may cause minor injuries. Do not use the product in locations with inflammable or explosive gases.

There is a risk of minor electrical shock, fire, or device failure. Do not disassemble, modify, repair, or touch the inside of the product.

Loose screws may cause fires. Tighten terminal screws to the specified torque of 0.49 to 0.59 N·m.

Use of excessive torque may damage the terminal screws. Tighten terminal screws to the specified torque of 0.49 to 0.59 N·m.

Use of the product beyond its life may result in contact welding or burning. Make sure to consider the actual operating conditions and use the product within its rated load and electrical life count. The life of the output relay varies significantly with the switching capacity and switching conditions.

Precautions for Safe Use

1. Do not use or store the product in the following locations.
   - Locations subject to water or oil
   - Outdoor locations or under direct sunlight
   - Locations subject to dust or corrosive gases (particularly sulfurizing gases, ammonia, etc.)
   - Locations subject to rapid temperature changes
   - Locations prone to icing and dew condensation
   - Locations subject to excessive vibration or shock
   - Locations subject to wind and rain
   - Locations subject to static electricity and noise
   - Habitats of insects or small animals
2. Use and store the product in a location where the ambient temperature and humidity are within the specified ranges. If applicable, provide forced cooling.
3. Mount the product in the correct direction.
4. Check terminal polarity when wiring and wire all connections correctly. The power supply terminals do not have polarity.
5. Do not wire the input and output terminals incorrectly.
6. Make sure the power supply voltage and loads are within the specifications and ratings for the product.
7. Make sure the crimp terminals for wiring are of the specified size.
8. Do not connect anything to terminals that are not being used.
9. Use a power supply that will reach the rated voltage within 1 second after the power is turned ON.
10. Keep wiring separate from high voltages and power lines that draw large currents.
    Do not place product wiring in parallel with or in the same path as high-voltage or high-current lines.
11. Do not install the product near equipment that generates high frequencies or surges.
12. The product may cause incoming radio wave interference. Do not use the product near radio wave receivers.
13. Install an external switch or circuit breaker and label it clearly so that the operator can quickly turn OFF the power supply.
14. Make sure the indicators operate correctly. Depending on the application environment, the indicators may deteriorate prematurely and become difficult to see.
15. Do not use the product if it is accidentally dropped. The internal components may be damaged.
16. Be sure you understand the contents of this catalog and handle the product according to the instructions provided.
17. Do not install the product in any way that would place a load on it.
18. When discarding the product, properly dispose of it as industrial waste.
19. When using the product, remember that the power supply terminals carry a high voltage.
20. The product must be handled only by trained electrician.
21. Prior to operation, check the wiring before you supply power to the product.
22. Do not install the product immediately next to heat sources.
23. Perform periodic maintenance.
24. Transient surge suppression shall be installed on the line side of this equipment and shall be rated 600 V (phase-to-ground), suitable for Overvoltage Category II, and shall provide protection for a rated impulse withstand voltage peak of 4 kV or equivalent.

Precautions for Correct Use

Observe the following operating methods to prevent failure and malfunction.

1. Use the power supply voltage, input power, and other power supplies and converters with suitable capacities and rated outputs.
2. Use a precision screwdriver or similar tool to adjust the setting knobs.
3. The distortion in the input waveform must be 30% max. If the input waveform is distorted beyond this level, it may cause unnecessary operation.
4. Error will be large if the product is used for thyristor or inverter control.
5. To reduce the error in the setting knob, always turn the setting knob from the minimum setting toward the maximum setting.
6. When cleaning the product, do not use thinners or solvents. Use commercial alcohol.

Correct Mounting Direction, Mounting, and Removing

- Mounting to DIN Track
  1. Attach the product to the DIN Track with the tab at the top and the hooks at the bottom.
  2. Push the product onto the Track until the hooks lock into place.

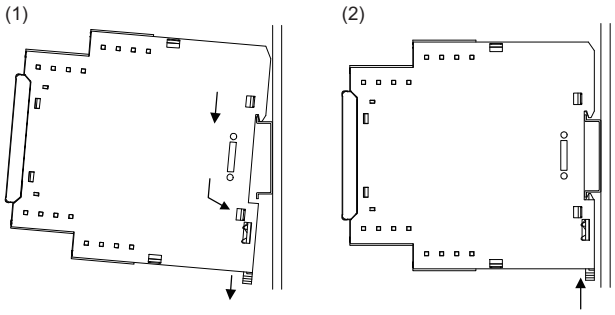

- Removing from the DIN Track
  Pull down on the bottom hook with a flat-blade screwdriver and lift up on the product.

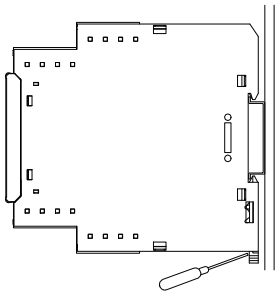

Applicable DIN Tracks:
PFP-100N (100 cm)
PFP-50N (50 cm)

Adjusting the Setting Knobs

- Use a screwdriver to adjust the setting knobs. The knobs have a stopper that prevents them from turning beyond the full right or left position. Do not force a knob beyond these points.

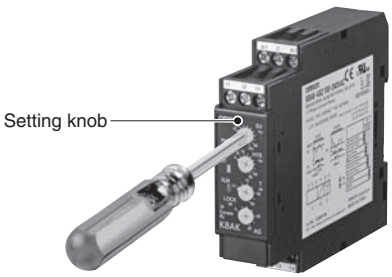

MEMO

Terms and Conditions Agreement

Read and understand this catalog.

Please read and understand this catalog before purchasing the products. Please consult your OMRON representative if you have any questions or comments.

Warranties.

(a) Exclusive Warranty. Omron's exclusive warranty is that the Products will be free from defects in materials and workmanship for a period of twelve months from the date of sale by Omron (or such other period expressed in writing by Omron). Omron disclaims all other warranties, express or implied.

(b) Limitations. OMRON MAKES NO WARRANTY OR REPRESENTATION, EXPRESS OR IMPLIED, ABOUT NON-INFRINGEMENT, MERCHANTABILITY OR FITNESS FOR A PARTICULAR PURPOSE OF THE PRODUCTS. BUYER ACKNOWLEDGES THAT IT ALONE HAS DETERMINED THAT THE PRODUCTS WILL SUITABLY MEET THE REQUIREMENTS OF THEIR INTENDED USE.

Omron further disclaims all warranties and responsibility of any type for claims or expenses based on infringement by the Products or otherwise of any intellectual property right. (c) Buyer Remedy. Omron's sole obligation hereunder shall be, at Omron's election, to (i) replace (in the form originally shipped with Buyer responsible for labor charges for removal or replacement thereof) the non-complying Product, (ii) repair the non-complying Product, or (iii) repay or credit Buyer an amount equal to the purchase price of the non-complying Product; provided that in no event shall Omron be responsible for warranty, repair, indemnity or any other claims or expenses regarding the Products unless Omron's analysis confirms that the Products were properly handled, stored, installed and maintained and not subject to contamination, abuse, misuse or inappropriate modification. Return of any Products by Buyer must be approved in writing by Omron before shipment. Omron Companies shall not be liable for the suitability or unsuitability or the results from the use of Products in combination with any electrical or electronic components, circuits, system assemblies or any other materials or substances or environments. Any advice, recommendations or information given orally or in writing, are not to be construed as an amendment or addition to the above warranty.

See http://www.omron.com/global/ or contact your Omron representative for published information.

Limitation on Liability; Etc.

OMRON COMPANIES SHALL NOT BE LIABLE FOR SPECIAL, INDIRECT, INCIDENTAL, OR CONSEQUENTIAL DAMAGES, LOSS OF PROFITS OR PRODUCTION OR COMMERCIAL LOSS IN ANY WAY CONNECTED WITH THE PRODUCTS, WHETHER SUCH CLAIM IS BASED IN CONTRACT, WARRANTY, NEGLIGENCE OR STRICT LIABILITY.

Further, in no event shall liability of Omron Companies exceed the individual price of the Product on which liability is asserted.

Suitability of Use.

Omron Companies shall not be responsible for conformity with any standards, codes or regulations which apply to the combination of the Product in the Buyer's application or use of the Product. At Buyer's request, Omron will provide applicable third party certification documents identifying ratings and limitations of use which apply to the Product. This information by itself is not sufficient for a complete determination of the suitability of the Product in combination with the end product, machine, system, or other application or use. Buyer shall be solely responsible for determining appropriateness of the particular Product with respect to Buyer's application, product or system. Buyer shall take application responsibility in all cases.

NEVER USE THE PRODUCT FOR AN APPLICATION INVOLVING SERIOUS RISK TO LIFE OR PROPERTY OR IN LARGE QUANTITIES WITHOUT ENSURING THAT THE SYSTEM AS A WHOLE HAS BEEN DESIGNED TO ADDRESS THE RISKS, AND THAT THE OMRON PRODUCT(S) IS PROPERLY RATED AND INSTALLED FOR THE INTENDED USE WITHIN THE OVERALL EQUIPMENT OR SYSTEM.

Programmable Products.

Omron Companies shall not be responsible for the user's programming of a programmable Product, or any consequence thereof.

Performance Data.

Data presented in Omron Company websites, catalogs and other materials is provided as a guide for the user in determining suitability and does not constitute a warranty. It may represent the result of Omron's test conditions, and the user must correlate it to actual application requirements. Actual performance is subject to the Omron's Warranty and Limitations of Liability.

Change in Specifications.

Product specifications and accessories may be changed at any time based on improvements and other reasons. It is our practice to change part numbers when published ratings or features are changed, or when significant construction changes are made. However, some specifications of the Product may be changed without any notice. When in doubt, special part numbers may be assigned to fix or establish key specifications for your application. Please consult with your Omron's representative at any time to confirm actual specifications of purchased Product.

Errors and Omissions.

Information presented by Omron Companies has been checked and is believed to be accurate; however, no responsibility is assumed for clerical, typographical or proofreading errors or omissions.

Note: Do not use this document to operate the Unit.

OMRON Corporation **Industrial Automation Company**

Kyoto, JAPAN **Contact : www.ia.omron.com**

Regional Headquarters

OMRON EUROPE B.V.
Wegalaan 67-69, 2132 JD Hoofddorp
The Netherlands
Tel: (31) 2356-81-300 Fax: (31) 2356-81-388

OMRON ELECTRONICS LLC
2895 Greenspoint Parkway, Suite 200
Hoffman Estates, IL 60169 U.S.A.
Tel: (1) 847-843-7900 Fax: (1) 847-843-7787

OMRON ASIA PACIFIC PTE. LTD.
438B Alexandra Road, #08-01/02 Alexandra
Technopark, Singapore 119968
Tel: (65) 6835-3011 Fax: (65) 6835-3011

OMRON (CHINA) CO., LTD.
Room 2211, Bank of China Tower,
200 Yin Cheng Zhong Road,
PuDong New Area, Shanghai, 200120, China
Tel: (86) 21-6023-0333 Fax: (86) 21-5037-2388

Authorized Distributor:

©OMRON Corporation 2014-2026 All Rights Reserved.
In the interest of product improvement,
specifications are subject to change without notice.

CSM_4_8
Cat. No. N179-E1-04 1026 (0314)