Conductive Level Controller

K8AK-LS

Ideal for Liquid Level Control in Industrial Facilities and Equipment.

- Self-holding circuit implemented with circuit processing that is not depending on external wiring.
- Switch between water supply and discharge with a DIP switch setting.
- Sensitivity adjustment of operating resistance from 10 k to 100 kΩ for application to a wide range of liquids.
- Prevents chattering of relay contacts that occurs with ripples.
- Easy wiring with ferrules.
- Use 2 × 2.5 mm^2 solid wire or 2 × 1.5 mm^2 ferrules.
- Applicable as a floatless switch.

For the most recent information on models that have been certified for safety standards, refer to your OMRON website.

Refer to *Safety Precautions* on page 7.

Ordering Information

Power supply voltage	Model
24 VAC/DC	**K8AK-LS1 24 VAC/DC**
100 to 240 VAC	**K8AK-LS1 100–240 VAC**

Accessories (Order Separately)

●Electrode Holders/Underwater Electrodes

Application	For general-purpose use, such as water supply lines	For areas with limited space	For liquids with low resistance	When mounting strength is required	For resistance to high-temperature or high-pressure liquids	For resistance against corrosion	For installation at long distances from the liquid level
Model	**PS-3S/-4S/-5S**	**PS-31 SUS304, 300 mm**	**BF-1**	**BF-3/-5**	**BS-1**	**BS-1T**	**PH-1/-2**
Appearance		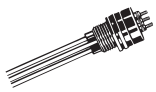	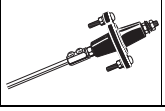	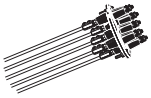		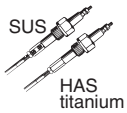	

●Electrode Rods

Electrode Rods are available in sets with the connection nuts, lock nuts, and tightening screws.

Application	Purified water service, industrial water, and sewage	Purified water service, industrial water, sewage, and weak alkaline solutions
Model	**F03-60 SUS304**	**F03-60 SUS316**

●Others

Item	Model
Protective Cover (Electrode Holders for the PS or BF Series)	**F03-11**
Mounting Piece (Electrode Holder for the PS Series)	**F03-12**
Separator (to prevent contact between electrodes)	**F03-14 1P (one pole)** **F03-14 3P (three poles)** **F03-14 5P (five poles)**

Ratings and Specifications

Ratings

Power supply voltage	24 VAC 50/60 Hz or 24 VDC 100 to 240 VAC 50/60 Hz
Voltage across electrodes	5 V p-p (Approx. 20 Hz)
Power consumption	24 VAC/DC: 2.0 VA/1.1 W max. 100 to 240 VAC: 4.6 VA max.
Operating resistance	10 k to 100 kΩ (variable)
Reset resistance	250 kΩ max.
Response time	Approx. 0.1 to 10 s (variable)
Length of cable	100 m max. (fully insulated 3-core 0.75-mm^2 cab-tyre cable, 600 V)
Indicators	PWR: Green, RY: Yellow
Output contact ratings	Rated load Resistive load 5 A at 250 VAC 5 A at 30 VDC Maximum switching capacity: 1,250 VA, 150 W Minimum load: 5 VDC, 10 mA (reference values) Mechanical life: 10 million operations min. Electrical life: 5 A at 250 VAC or 30 VDC: 50,000 operations 3 A at 250 VAC/30 VDC: 100,000 operations
Ambient operating temperature	–20 to 60°C (with no condensation or icing)
Storage temperature	–25 to 65°C (with no condensation or icing)
Ambient humidity	25% to 85% (with no condensation)
Storage humidity	25% to 85% (with no condensation)
Altitude	2,000 m max.
Terminal screw tightening torque	0.49 to 0.59 N·m
Case color	N1.5
Case material	PC and ABS, UL 94 V-0
Weight	Approx. 150 g
Mounting	Mounts to DIN Track.
Dimensions	22.5 × 90 × 100 mm (W×D×H)

Specifications

Operating voltage range	85% to 110% of rated voltage
Installation environment	Installation category II, pollution level 2
Approved standards	EN 61010-1
EMC	EN 61326-1 Industrial electromagnetic environment
Safety standards	UL 508 (Recognition), Korean Radio Waves Act (Act 10564)*, CSA: C22.2 No.14*, CCC: GB/T 14048.5*
Insulation resistance	20 MΩ min. Between all external terminals and the case Between all power supply terminals and all input terminals Between all power supply terminals and all output terminals Between all input terminals and all output terminals
Dielectric strength	2,000 VAC for 1 min Between all external terminals and the case Between all power supply terminals and all input terminals Between all power supply terminals and all output terminals Between all input terminals and all output terminals
Noise immunity	1,500 V power supply terminal common/normal mode Square-wave noise of ±1-µs/100-ns pulse width with 1-ns rise time
Vibration resistance	Frequency: 10 to 55 Hz, 0.35-mm single amplitude 10 sweeps of 5 min each in X,Y, and Z directions
Shock resistance	100 m/s^2, 3 times each in 6 directions along 3 axes
Degree of protection	Terminals: IP20

* Products manufactured in Indonesia (for the North America, Southeast Asia, and India regions) do not carry CSA, KC, or CCC certification. Applicable products can be identified by the suffix "HI" at the end of the Lot No.

Individual Packaging Label

Product Label

Connections

Terminal Diagram

K8AK-LS1 100-240VAC
(1) (2)

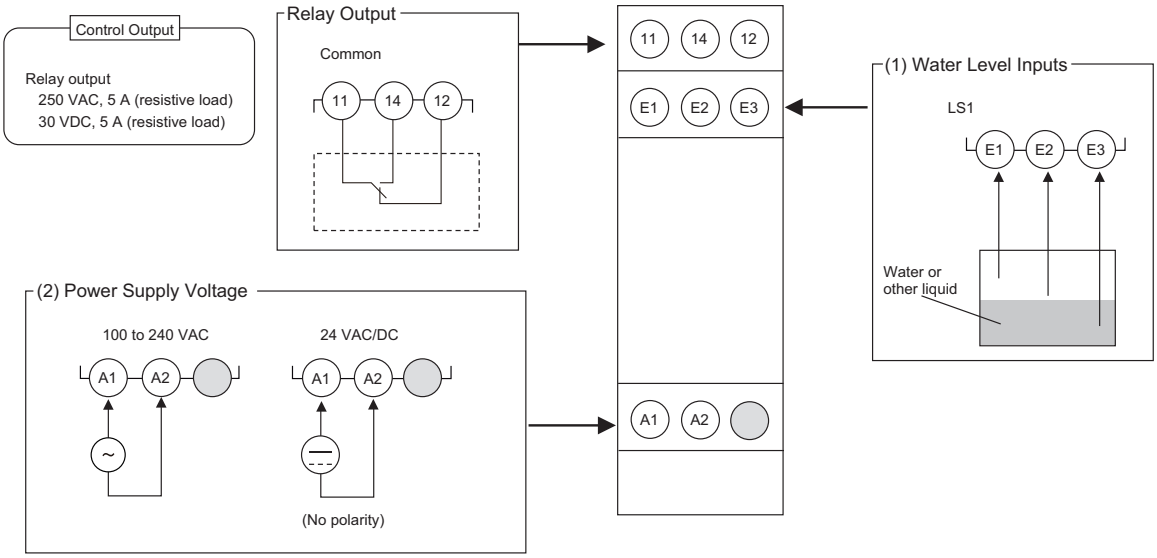

Note: 1. Do not connect anything to terminals that are shaded in gray.
2. Use the recommended ferrules if you use twisted wires.

Wiring Example

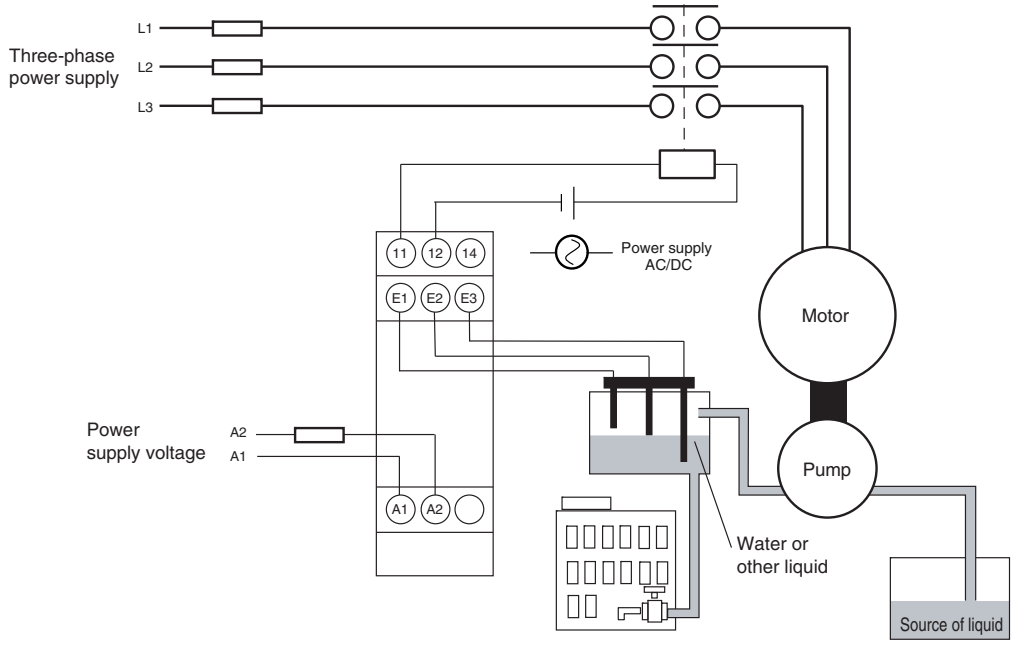

Pump motor protection mechanisms have been omitted.

Timing Charts

●DIP Switch Pin 1: OFF (Automatic Liquid Supply Operation)

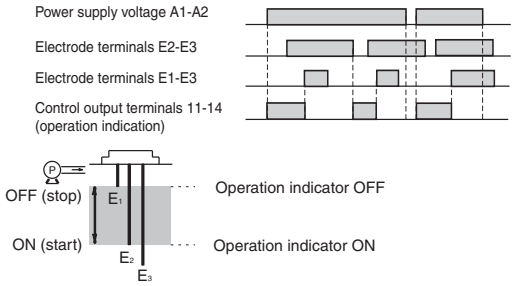

- When the liquid level falls to E2 (indicator turns ON), the pump starts. When the liquid level rises above E1 (indicator turns OFF), the pump stops.

●DIP Switch Pin 1: ON (Automatic Liquid Discharge Operation)

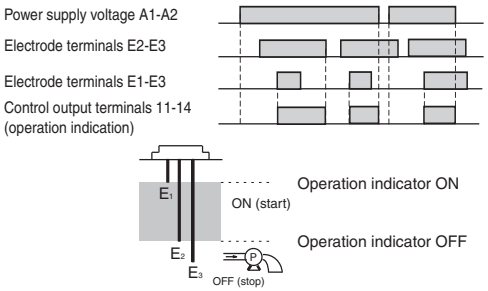

- When the liquid level reaches E1 (indicator turns ON), the pump starts. When the liquid level falls below E2 (indicator turns OFF), the pump stops.

Nomenclature

Front Panel

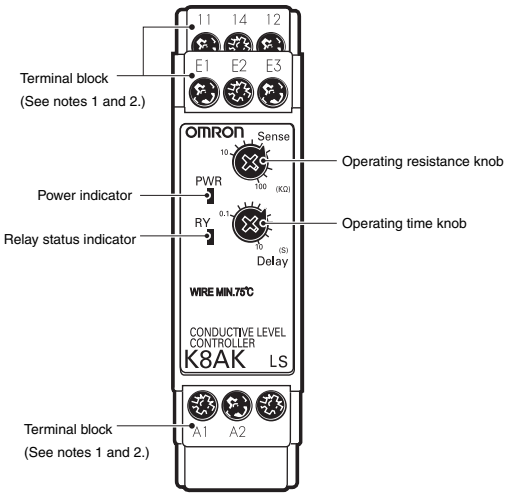

●Indicators

Item	Description
Power indicator (PWR: Green)	Lit when power is being supplied.
Relay status indicator (RY: Yellow)	Lit when contacts are operating.

●Setting Knobs

Item	Description
Operating resistance knob	Used to set the resistance to 10 to 100 kΩ.
Operating time knob	Used to set the operating time to 0.1 to 10 s.

Note: 1. Use solid-core wires of 2.5-mm^2 max. or ferrules with an insulation sleeve to wire to this terminal.
To ensure the dielectric strength of the connection, do not expose more than 8 mm of wire for insertion into the terminal.

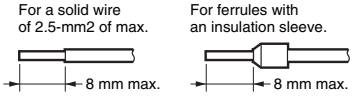

Recommended ferrules
Phoenix Contact
- AI 1,5-8BK (for AWG16)
- AI 1-8RD (for AWG18)
- AI 0,75-8GY (for AWG18)

2. Screw tightening torque: 0.49 to 0.59 N·m
3. The terminal screw is a Pozidriv screw.

Operation Method

DIP Switch Settings

The operating mode is set using the DIP switch located at the bottom of the Unit. The K8AK-LS does not have SW2.

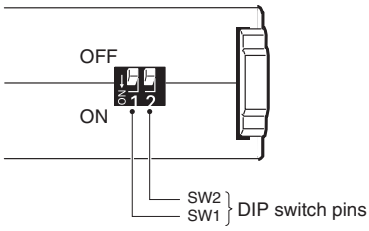

●DIP Switch Function

Pin	OFF ● ↑ / ON ○ ↓	1 (OFF / ON)	2
Operating mode	Automatic liquid supply operation	●	Not used.
	Automatic liquid discharge operation	○	

Note: All pins are set to OFF by default.

Dimensions

(Unit: mm)

Conductive Level Controller

K8AK-LS

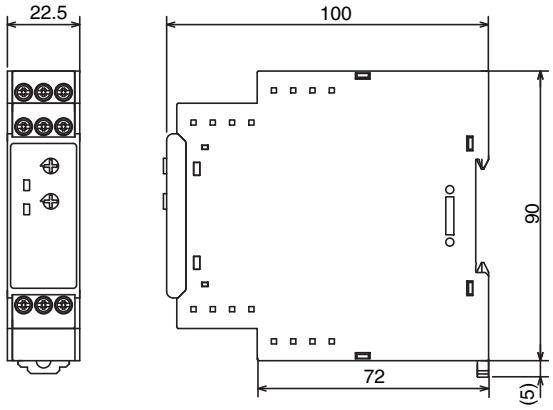

Optional Parts for DIN Track Mounting

●DIN Tracks

PFP-100N
PFP-50N

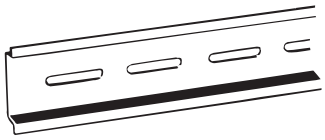

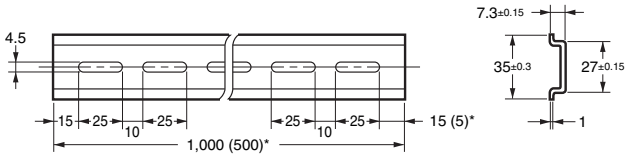

*Dimensions in parentheses are for the PFP-50N.

Safety Precautions

Be sure to read the precautions for all models in the website at the following URL: http://www.ia.omron.com/.

Warning Indications

CAUTION	Indicates a potentially hazardous situation which, if not avoided, may result in minor or moderate injury or in property damage.
Precautions for Safe Use	Supplementary comments on what to do or avoid doing, to use the product safely.
Precautions for Correct Use	Supplementary comments on what to do or avoid doing, to prevent failure to operate, malfunction, or undesirable effects on product performance.

Meaning of Product Safety Symbols

	Used to warn of the risk of electric shock under specific conditions.
	Used for general prohibitions for which there is no specific symbol.
	Used to indicate prohibition when there is a risk of minor injury from electrical shock or other source if the product is disassembled.
	Used for general mandatory action precautions for which there is no specified symbol.

CAUTION

Electrical shock may cause minor injury.
Do not touch terminals while electricity is being supplied.

There is a risk of minor electrical shock, fire, or device failure. Do not allow any pieces of metal, conductors, or cutting chips that occur during the installation process to enter the product.

Explosions may cause minor injuries. Do not use the product in locations with inflammable or explosive gases.

There is a risk of minor electrical shock, fire, or device failure. Do not disassemble, modify, repair, or touch the inside of the product.

Loose screws may cause fires. Tighten terminal screws to the specified torque of 0.49 to 0.59 N·m.

Use of excessive torque may damage the terminal screws. Tighten terminal screws to the specified torque of 0.49 to 0.59 N·m.

Use of the product beyond its life may result in contact welding or burning. Make sure to consider the actual operating conditions and use the product within its rated load and electrical life count. The life of the output relay varies significantly with the switching capacity and switching conditions.

Precautions for Safe Use

1. Do not use or store the product in the following locations.
   - Locations subject to water or oil
   - Outdoor locations or under direct sunlight
   - Locations subject to dust or corrosive gases (particularly sulfurizing gases, ammonia, etc.)
   - Locations subject to rapid temperature changes
   - Locations prone to icing and dew condensation
   - Locations subject to excessive vibration or shock
   - Locations subject to wind and rain
   - Locations subject to static electricity and noise
   - Habitats of insects or small animals
2. Use and store the product in a location where the ambient temperature and humidity are within the specified ranges. If applicable, provide forced cooling.
3. Mount the product in the correct direction.
4. Check terminal polarity when wiring and wire all connections correctly. The power supply terminals do not have polarity.
5. Do not wire the input and output terminals incorrectly.
6. Make sure the power supply voltage and loads are within the specifications and ratings for the product.
7. Make sure the crimp terminals for wiring are of the specified size.
8. Do not connect anything to terminals that are not being used.
9. Use a power supply that will reach the rated voltage within 1 second after the power is turned ON.
10. Keep wiring separate from high voltages and power lines that draw large currents.
    Do not place product wiring in parallel with or in the same path as high-voltage or high-current lines.
11. Do not install the product near equipment that generates high frequencies or surges.
12. The product may cause incoming radio wave interference. Do not use the product near radio wave receivers.
13. Install an external switch or circuit breaker and label it clearly so that the operator can quickly turn OFF the power supply.
14. Make sure the indicators operate correctly. Depending on the application environment, the indicators may deteriorate prematurely and become difficult to see.
15. The terminal blocks may heat up to 65°C. Use care when handling them.
16. Do not use the product if it is accidentally dropped. The internal components may be damaged.
17. Be sure you understand the contents of this catalog and handle the product according to the instructions provided.
18. Do not install the product in any way that would place a load on it.
19. When discarding the product, properly dispose of it as industrial waste.
20. When using the product, remember that the power supply terminals carry a high voltage.
21. The product must be handled only by trained electrician.
22. Prior to operation, check the wiring before you supply power to the product.
23. Do not install the product immediately next to heat sources.
24. Perform periodic maintenance.
25. Transient surge suppression shall be installed on the line side of this equipment and shall be rated 600 V (phase-to-ground), suitable for Overvoltage Category II, and shall provide protection for a rated impulse withstand voltage peak of 4 kV or equivalent.

Precautions for Correct Use

Observe the following operating methods to prevent failure and malfunction.

1. Use the power supply voltage, input power, and other power supplies and converters with suitable capacities and rated outputs.
2. Use a precision screwdriver or similar tool to adjust the setting knobs.
3. When cleaning the product, do not use thinners or solvents. Use commercial alcohol.

Correct Mounting Direction, Mounting, and Removing

- Mounting to DIN Track
  1. Attach the product to the DIN Track with the tab at the top and the hooks at the bottom.
  2. Push the product onto the Track until the hooks lock into place.

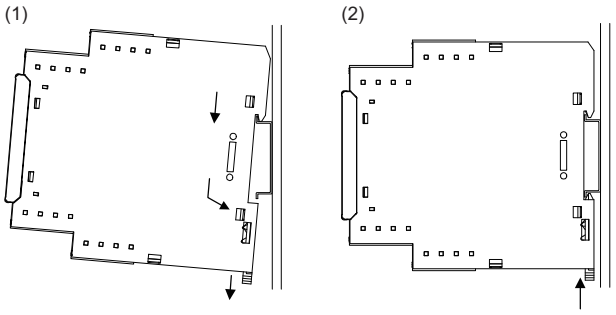

- Removing from the DIN Track
  Pull down on the bottom hook with a flat-blade screwdriver and lift up on the product.

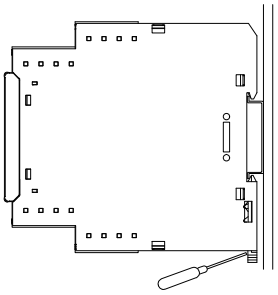

Applicable DIN Tracks:
PFP-100N (100 cm)
PFP-50N (50 cm)

Adjusting the Setting Knobs

- Use a screwdriver to adjust the setting knobs. The knobs have a stopper that prevents them from turning beyond the full right or left position. Do not force a knob beyond these points.

MEMO

MEMO

Terms and Conditions Agreement

Read and understand this catalog.

Please read and understand this catalog before purchasing the products. Please consult your OMRON representative if you have any questions or comments.

Warranties.

(a) Exclusive Warranty. Omron's exclusive warranty is that the Products will be free from defects in materials and workmanship for a period of twelve months from the date of sale by Omron (or such other period expressed in writing by Omron). Omron disclaims all other warranties, express or implied.

(b) Limitations. OMRON MAKES NO WARRANTY OR REPRESENTATION, EXPRESS OR IMPLIED, ABOUT NON-INFRINGEMENT, MERCHANTABILITY OR FITNESS FOR A PARTICULAR PURPOSE OF THE PRODUCTS. BUYER ACKNOWLEDGES THAT IT ALONE HAS DETERMINED THAT THE PRODUCTS WILL SUITABLY MEET THE REQUIREMENTS OF THEIR INTENDED USE.

Omron further disclaims all warranties and responsibility of any type for claims or expenses based on infringement by the Products or otherwise of any intellectual property right. (c) Buyer Remedy. Omron's sole obligation hereunder shall be, at Omron's election, to (i) replace (in the form originally shipped with Buyer responsible for labor charges for removal or replacement thereof) the non-complying Product, (ii) repair the non-complying Product, or (iii) repay or credit Buyer an amount equal to the purchase price of the non-complying Product; provided that in no event shall Omron be responsible for warranty, repair, indemnity or any other claims or expenses regarding the Products unless Omron's analysis confirms that the Products were properly handled, stored, installed and maintained and not subject to contamination, abuse, misuse or inappropriate modification. Return of any Products by Buyer must be approved in writing by Omron before shipment. Omron Companies shall not be liable for the suitability or unsuitability or the results from the use of Products in combination with any electrical or electronic components, circuits, system assemblies or any other materials or substances or environments. Any advice, recommendations or information given orally or in writing, are not to be construed as an amendment or addition to the above warranty.

See http://www.omron.com/global/ or contact your Omron representative for published information.

Limitation on Liability; Etc.

OMRON COMPANIES SHALL NOT BE LIABLE FOR SPECIAL, INDIRECT, INCIDENTAL, OR CONSEQUENTIAL DAMAGES, LOSS OF PROFITS OR PRODUCTION OR COMMERCIAL LOSS IN ANY WAY CONNECTED WITH THE PRODUCTS, WHETHER SUCH CLAIM IS BASED IN CONTRACT, WARRANTY, NEGLIGENCE OR STRICT LIABILITY.

Further, in no event shall liability of Omron Companies exceed the individual price of the Product on which liability is asserted.

Suitability of Use.

Omron Companies shall not be responsible for conformity with any standards, codes or regulations which apply to the combination of the Product in the Buyer's application or use of the Product. At Buyer's request, Omron will provide applicable third party certification documents identifying ratings and limitations of use which apply to the Product. This information by itself is not sufficient for a complete determination of the suitability of the Product in combination with the end product, machine, system, or other application or use. Buyer shall be solely responsible for determining appropriateness of the particular Product with respect to Buyer's application, product or system. Buyer shall take application responsibility in all cases.

NEVER USE THE PRODUCT FOR AN APPLICATION INVOLVING SERIOUS RISK TO LIFE OR PROPERTY OR IN LARGE QUANTITIES WITHOUT ENSURING THAT THE SYSTEM AS A WHOLE HAS BEEN DESIGNED TO ADDRESS THE RISKS, AND THAT THE OMRON PRODUCT(S) IS PROPERLY RATED AND INSTALLED FOR THE INTENDED USE WITHIN THE OVERALL EQUIPMENT OR SYSTEM.

Programmable Products.

Omron Companies shall not be responsible for the user's programming of a programmable Product, or any consequence thereof.

Performance Data.

Data presented in Omron Company websites, catalogs and other materials is provided as a guide for the user in determining suitability and does not constitute a warranty. It may represent the result of Omron's test conditions, and the user must correlate it to actual application requirements. Actual performance is subject to the Omron's Warranty and Limitations of Liability.

Change in Specifications.

Product specifications and accessories may be changed at any time based on improvements and other reasons. It is our practice to change part numbers when published ratings or features are changed, or when significant construction changes are made. However, some specifications of the Product may be changed without any notice. When in doubt, special part numbers may be assigned to fix or establish key specifications for your application. Please consult with your Omron's representative at any time to confirm actual specifications of purchased Product.

Errors and Omissions.

Information presented by Omron Companies has been checked and is believed to be accurate; however, no responsibility is assumed for clerical, typographical or proofreading errors or omissions.

Note: Do not use this document to operate the Unit.

OMRON Corporation **Industrial Automation Company**

Kyoto, JAPAN **Contact : www.ia.omron.com**

Regional Headquarters

OMRON EUROPE B.V.
Wegalaan 67-69, 2132 JD Hoofddorp
The Netherlands
Tel: (31) 2356-81-300 Fax: (31) 2356-81-388

OMRON ELECTRONICS LLC
2895 Greenspoint Parkway, Suite 200
Hoffman Estates, IL 60169 U.S.A.
Tel: (1) 847-843-7900 Fax: (1) 847-843-7787

OMRON ASIA PACIFIC PTE. LTD.
438B Alexandra Road, #08-01/02 Alexandra
Technopark, Singapore 119968
Tel: (65) 6835-3011 Fax: (65) 6835-3011

OMRON (CHINA) CO., LTD.
Room 2211, Bank of China Tower,
200 Yin Cheng Zhong Road,
PuDong New Area, Shanghai, 200120, China
Tel: (86) 21-6023-0333 Fax: (86) 21-5037-2388

Authorized Distributor:

©OMRON Corporation 2014-2026 All Rights Reserved.
In the interest of product improvement,
specifications are subject to change without notice.

CSM_4_10

Cat. No. N188-E1-04 1026 (0314)