Three-phase Voltage and Phase-sequence Phase-loss Relay

K8AK-PM

Ideal for Monitoring 3-phase Power Supplies for Industrial Facilities and Equipment.

- Greater resistance to inverter noise. ***NEW***
- Monitor overvoltages, undervoltages, phase sequence, and phase loss for three-phase 3-wire or 4-wire power supplies with just one Unit.
  Switch setting for 3-phase 3-wire or 3-phase 4-wire power supply.
- Two SPDT output relays, 5 A at 250 VAC (resistive load).
  Output overvoltages and undervoltages using separate relays.
- World-wide power specifications supported by one Unit (switchable).
- Output status can be monitored using LED indicator.

Refer to *Safety Precautions* on page 11.
Refer to page 9 to 10 for commonly asked questions.

For the most recent information on models that have been certified for safety standards, refer to your OMRON website.

Ordering Information

List of Models

Rated input*		Model
3-phase 3-wire mode	200, 220, 230, 240 VAC	**K8AK-PM1**
3-phase 4-wire mode	115, 127, 133, 138 VAC	
3-phase 3-wire mode	380, 400, 415, 480 VAC	**K8AK-PM2**
3-phase 4-wire mode	220, 230, 240, 277 VAC	

Note: Three-phase 3-wire or 4-wire and the input range are switched using a DIP switch.
* The power supply voltage is the same as the rated input voltage.

●Single K8AK Monitors 3-phase Power Supply with 3 or 4 Wires

Monitoring Relays can be used to monitor 3-phase power supplies with 3 or 4 wires simply by changing DIP switch settings.

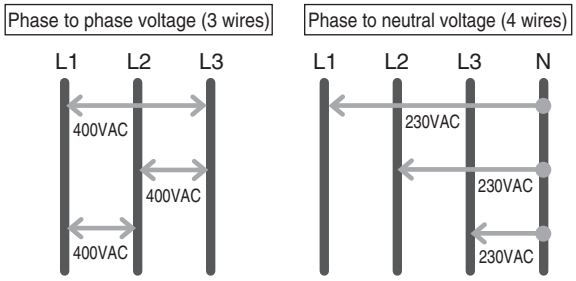

A Single K8AK Can Monitor a 3-phase Power Supply Anywhere in the World

Reduces Maintenance Parts Inventory

	SW3			**ON**	**OFF**	**ON**	**OFF**
	SW4			**ON**	**ON**	**OFF**	**OFF**
K8AK-PM1	SW2	ON	P-N	138 V	133 V	127 V	115 V
		OFF	P-P	240V	230 V	220 V	200 V
K8AK-PM2	SW2	ON	P-N	277 V	240 V	230 V	220 V
		OFF	P-P	480 V	415 V	400 V	380 V

Ratings and Specifications

Ratings

Rated input voltage	**K8AK-PM1**	Three-phase, three-wire Mode: 200, 220, 230 and 240 VAC Three-phase, four-wire Mode: 115, 127, 133 and 138 VAC
	K8AK-PM2	Three-phase, three-wire Mode: 380, 400, 415 and 480 VAC Three-phase, four-wire Mode: 220, 230, 240 and 277 VAC
Input load		K8AK-PM1: Approx. 4.4 VA K8AK-PM2: Approx. 4.4 VA
Operating value setting range (OVER, UNDER)		Overvoltage –30% to 25% of rated input voltage Undervoltage –30% to 25% of rated input voltage **Note:** The rated input voltage can be switched using the DIP switch.
Operating value		100% operation at set value
Reset value		5% of operating value (fixed)
Reset method		Automatic reset
Operating time setting range (T)	**Overvoltage/undervoltage**	0.1 to 30 s
	Phase sequence	0.1 s±0.05 s
	Phase loss	0.1 s max.
Power ON lock time (LOCK)		1 s or 5 s (Switched using DIP switch.)
Indicators		Power (PWR): Green, Relay output (RY): Yellow, OVER/UNDER: Red
Output relays		Two SPDT relays (NC operation)
Output relay ratings		Rated load Resistive load 5 A at 250 VAC 5 A at 30 VDC Maximum switching capacity: 1,250 VA, 150 W Minimum load: 5 VDC, 10 mA (reference values) Mechanical life: 10 million operations min. Electrical life: 5 A at 250 VAC or 30 VDC: 50,000 operations 3 A at 250 VAC/30 VDC: 100,000 operations
Ambient operating temperature		–20 to 60°C (with no condensation or icing)
Storage temperature		–25 to 65°C (with no condensation or icing)
Ambient operating humidity		25% to 85% (with no condensation)
Storage humidity		25% to 85% (with no condensation)
Altitude		2,000 m max.
Terminal screw tightening torque		0.49 to 0.59 N·m
Terminal wiring method		Recommended wire Solid wire: 2.5 mm^2 Twisted wires: AWG16, AWG18 **Note: 1.** Ferrules with insulating sleeves must be used with twisted wires. **2.** Two wires can be twisted together. Recommended ferrules AI 1,5-8BK (for AWG16) manufactured by Phoenix Contact AI 1-8RD (for AWG18) manufactured by Phoenix Contact AI 0,75-8GY (for AWG18) manufactured by Phoenix Contact
Case color		N1.5
Case material		PC and ABS, UL 94 V-0
Weight		Approx. 150 g
Mounting		Mounts to DIN Track.
Dimensions		22.5 × 90 × 100 mm (W×H×D)

Specifications

Input frequency		50/60 Hz
Overload capacity		Continuous input at 115% of maximum input, 10 s at 125% (up to 600 VAC).
Repeat accuracy	**Operating value**	±0.5% full scale (at 25°C and an ambient humidity of 65% at the rated power supply voltage, DC and 50/60 Hz sine wave input)
	Operating time	±50 ms (at 25°C and 65% humidity, rated power supply voltage)
Applicable standards	**Conforming standards**	EN 60947-5-1 Installation environment (pollution level 2, installation category III)
	EMC	EN 60947-5-1
	Safety standards	UL 508 (Recognition), Korean Radio Waves Act (Act 10564)*, CSA: C22.2 No.14*, CCC: GB/T 14048.5*
Insulation resistance		20 MΩ Between all external terminals and the case Between all input terminals and all output terminals
Dielectric strength		2,000 VAC for 1 min Between all external terminals and the case Between all input terminals and all output terminals
Noise immunity		1,500 V power supply terminal common/normal mode Square-wave noise of ±1 μs/100 ns pulse width with 1-ns rise time
Vibration resistance		Frequency: 10 to 55 Hz, 0.35-mm single amplitude 10 sweeps of 5 min each in X,Y, and Z directions
Shock resistance		100 m/s^2, 3 times each in 6 directions along 3 axes
Degree of protection		Terminals: IP20

* Products manufactured in Indonesia (for the North America, Southeast Asia, and India regions) do not carry CSA, KC, or CCC certification. Applicable products can be identified by the suffix "HI" at the end of the Lot No.

Individual Packaging Label

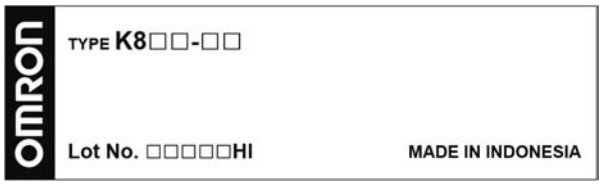

Product Label

●Relationship of Mounting Distance between K8AK-PM Relays and Ambient Temperature (Reference Values)

The following diagram shows the relationship between the mounting distances and the ambient temperature.
If the relay is used with an ambient temperature that exceeds these values, the temperature of the K8AK may rise and shorten the life of the internal components.

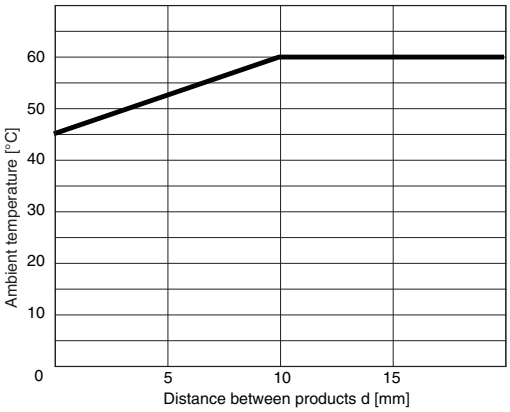

Test method

Sample: K8AK-PM
Mounting distances: 0, 5, and 10 mm min.

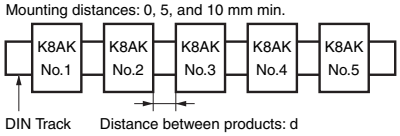

Connections

Terminal Diagram

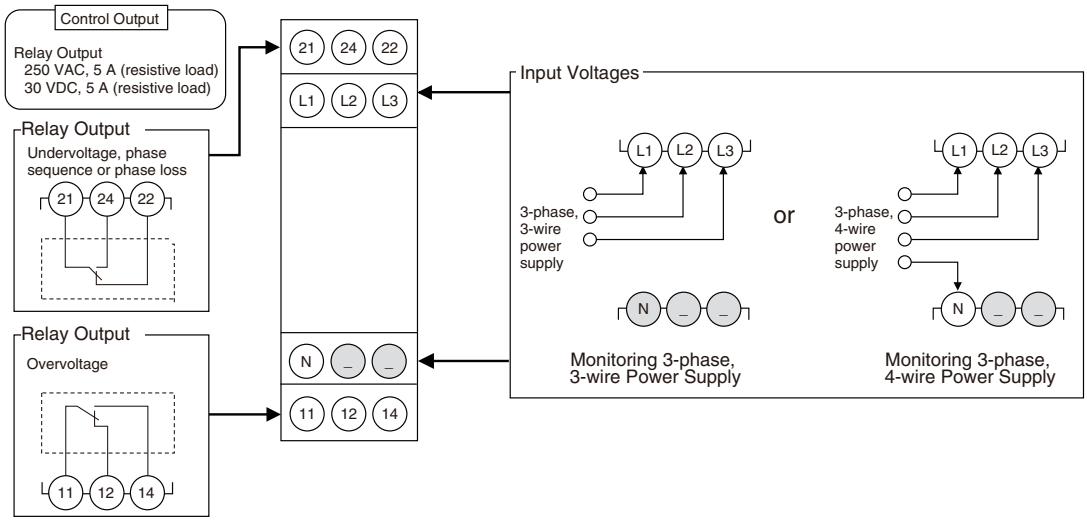

Note: 1. Do not connect anything to terminals that are shaded in gray.
2. Use the recommended ferrules if you use twisted wires.

Wiring Example

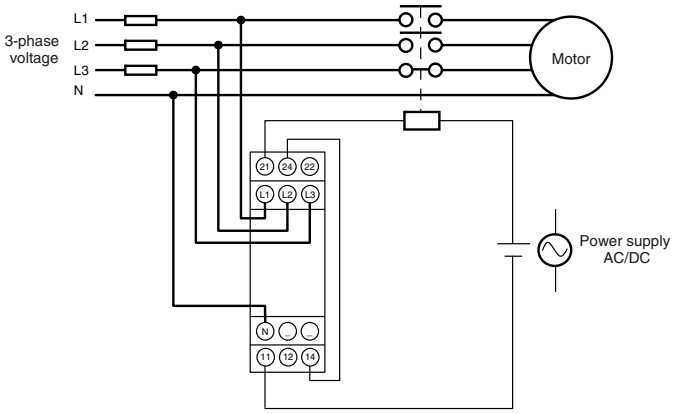

Timing Charts

●Overvoltage/Undervoltage and Phase Sequence/Phase Loss Operation Diagram

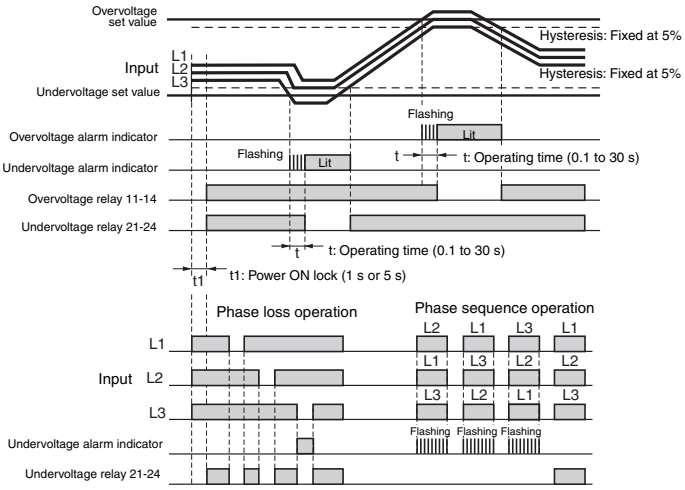

Note: 1. The K8AK-PM□ output relay is normally operative.
2. The power ON lock prevents unnecessary alarms from being generated during the instable period when the power is first turned on. There is no relay output during timer operation.
3. Phase loss is detected by L1, L2, and L3 voltage drops. A phase loss will exist if any of the phases drops below 60% of the rated input.

Operation Indicators

Item		Display			Contact operation	
		Ry indicator	Over indicator	Under indicator	Over relay	Under relay
Overvoltage		ON	ON	OFF	OFF	ON
Undervoltage		ON	OFF	ON	ON	OFF
Phase loss		OFF	OFF*1	ON*2	OFF *1	OFF
Phase sequence	**Incorrect phase**	ON	OFF	Flashing*3	ON	OFF
	Correct phase	ON	OFF	OFF	ON	ON

*1 Over_Ry turns OFF when phase loss is detected.
*2 L1 and L2 are also used for the power supply. If the voltage becomes very low, the indicator will turn OFF.
*3 The indicator will flash once per second after an incorrect phase is detected and once per 0.5 second during the detection time.

Nomenclature

Front

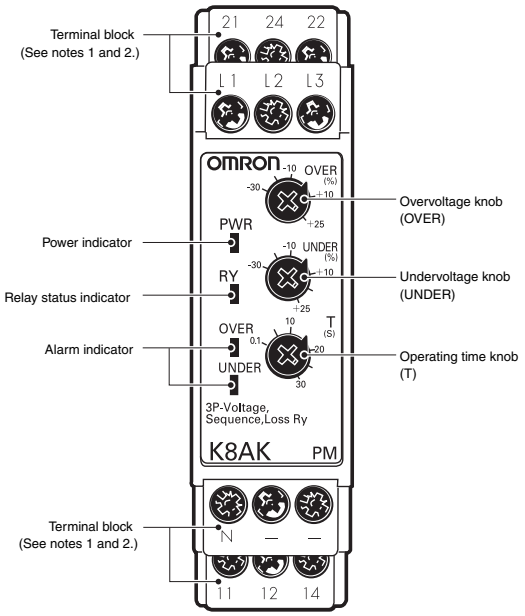

●Indicators

Item		Meaning
Power indicator (PWR: Green)		Lit when power is being supplied*
Relay status indicator (RY: Yellow)		Lit when relay is operating (normally lit).
Alarm indicator	Overvoltage: Red	Lit when there is an overvoltage. The indicator flashes to indicate the error status after the overvoltage has exceeded the set value while the operating time is being clocked.
	Undervoltage: Red	• Lit when there is an undervoltage or phase loss. The indicator flashes to indicate the error status after the undervoltage has exceeded the set value while the operating time is being clocked. • Lit when there is a phase sequence error.

* The input across L1 and L2 is used for the internal power supply. Therefore, the power indicator will not be lit if there is no input across L1 and L2.

●Setting Knobs

Item	Usage
Overvoltage knob (OVER)	Can be set between –30% and 25% of the rated input.
Undervoltage knob (UNDER)	Can be set between –30% and 25% of the rated input.
Operating time knob (T)	Used to set the operating time to 0.1 to 30 s.

Note: 1. Use either a solid wire of 2.5 mm^2 maximum or a ferrule with insulating sleeve for the terminal connection.
The length of the exposed current-carrying part inserted into the terminal must be 8 mm or less to maintain dielectric strength after connection.

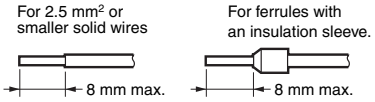

Recommended ferrules
Phoenix Contact
- AI 1,5-8BK (for AWG16)
- AI 1-8RD (for AWG18)
- AI 0,75-8GY (for AWG18)

2. Screw tightening torque: 0.49 to 0.59 N·m
3. The terminal screw is a Pozidriv screw.

Operation Methods

Connections

●Input

Connect to L1, L2, and L3 (for three-phase three-wire mode) or L1, L2, L3, and N (for three-phase four-wire mode), depending on the mode selected using pin 2 on the DIP switch.
The Unit will not operate correctly if the DIP switch setting and the wiring do not agree.
Make sure the phase sequence is wired correctly. The Unit will not operate normally if the phase sequence is incorrect.

●Outputs

Terminals 11, 12, and 14 are the output terminals for overvoltage (SPDT).
Terminals 21, 22, and 24 are the output terminals for undervoltage, phase loss, and phase sequence (SPDT).

* Use the recommended ferrules if you use twisted wires.

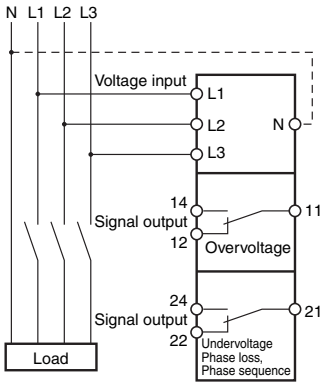

DIP Switch Settings

The power ON lock time, number of wires, and rated voltage are set using the DIP switch located on the bottom of the Unit.

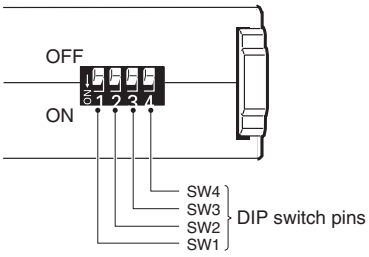

●DIP Switch Functions

K8AK-PM1

Pin	OFF ● ↑ / ON ○ ↓		1 (OFF / ON)	2	3	4
Power ON lock time	1 s		●	---	---	---
	5 s		○	---	---	---
Number of wires	3-wire 3-phase		---	●	---	---
	4-wire 3-phase		---	○	---	---
Rated voltage	3-wire 3-phase	4-wire 3-phase				
	200 V	115 V	---	---	●	●
	220 V	127 V	---	---	○	●
	230 V	133 V	---	---	●	○
	240 V	138 V	---	---	○	○

Note: All pins are set to OFF at the factory.

K8AK-PM2

Pin	OFF ● ↑ / ON ○ ↓		1 (OFF / ON)	2	3	4
Power ON lock time	1 s		●	---	---	---
	5 s		○	---	---	---
Number of wires	3-wire 3-phase		---	●	---	---
	4-wire 3-phase		---	○	---	---
Rated voltage	3-wire 3-phase	4-wire 3-phase				
	380 V	220 V	---	---	●	●
	400 V	230 V	---	---	○	●
	415 V	240 V	---	---	●	○
	480 V	277 V	---	---	○	○

Note: All pins are set to OFF at the factory.

Setting Method

●Overvoltage

The overvoltage knob (OVER) is used to set the overvoltage threshold.
The overvoltage can be set to between –30% and 25% of the rated input voltage.
Turn the knob while there is an input to the input terminals until the alarm indicator flashes (when the set value and the input have reached the same level.)
Use this as a guide to set the voltage.
The rated input depends on the model and DIP switch setting.

Example: K8AK-PM1 with Pin 2 Turned OFF (Three-phase, Three-wire Mode) and Pins 3 and 4 Turned OFF (Rated Voltage of 200 V)
The rated input voltage is 200 VAC and the setting range is 140 to 250 V.

●Undervoltage

Undervoltage is set using the undervoltage knob (UNDER).
The undervoltage can be set to between –30% and 25% of the rated input.
Turn the knob while there is an input to the input terminals until the alarm indicator flashes (when the set value and the input have reached the same level.)
Use this as a guide to set the voltage.
The rated input depends on the model and DIP switch setting.

Example: K8AK-PM1 with Pin 2 Turned OFF (Three-phase, Three-wire Mode) and Pins 3 and 4 Turned OFF (Rated Voltage of 200 V)
The rated input voltage is 200 VAC and the setting range is 140 to 250 V.

●Operating Time

The operating time is set using the operating time knob (T).
The operating time can be set to between 0.1 and 30 s.
If the input exceeds (or drops lower than) the voltage set value, the alarm indicator will start flashing for the set period and then stay lit.

Dimensions

(Unit: mm)

Three-phase Voltage and Phase-sequence Phase-loss Relays

K8AK-PM1
K8AK-PM2

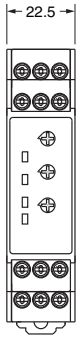

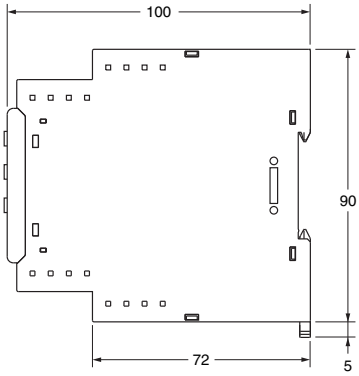

Optional Parts for DIN Track Mounting

●DIN Tracks

PFP-100N
PFP-50N

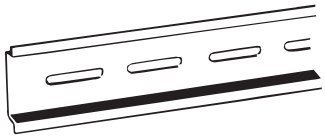

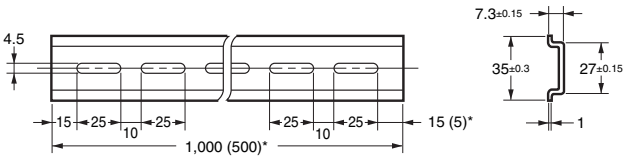

*Dimensions in parentheses are for the PFP-50N.

Questions and Answers

Q Checking Operation

A Overvoltages
Gradually increase the input from 80% of the set value.
The input value will equal the operating value when the input exceeds the set value and the alarm indicator starts flashing.
Operation can be checked by the relay output that will start after the operating time has passed.
Undervoltage
Gradually decrease the input from 120% of the set value and check the operation using the same method as for overvoltage.

Example: For monitoring mode set to three-phase three-wire monitoring, a rated voltage of 200 V, and an operating time of 5 s.

Note: K8AK-PM□ output relays are normally operative.

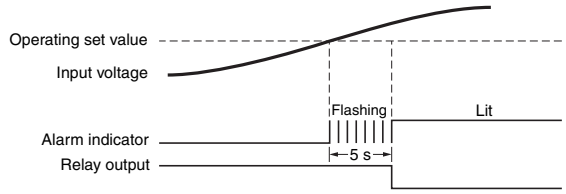

Connection Diagram 1

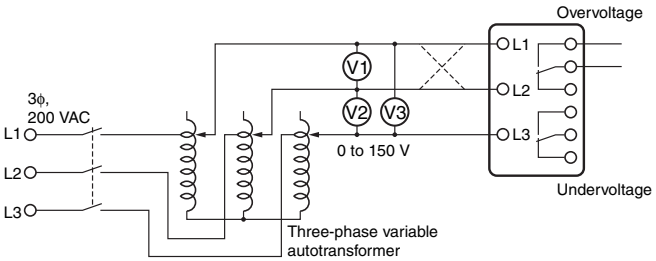

Q How to Measure the Operating Time

A Overvoltage
Change the input suddenly from 0% to 120% of the set value and measure the time until the Unit operates.
Undervoltage
Change the input suddenly from 120% to 0% of the set value and measure the time until the Unit operates.
Operating Time
Adjust the slide resistor so that the voltage applied to the K8AK terminals is 120% of the set value (for overvoltage detection) and 80% of the set value (for undervoltage detection) when the auxiliary relay operates, as shown in connection diagram 2. Close the switch and use the cycle counter to measure the operating time.

Connection Diagram 2

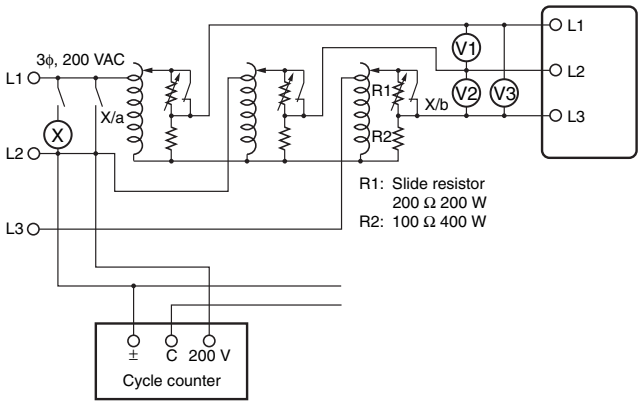

Q Checking the Phase Sequence and Phase Loss Operation

A Phase Sequence
Switch the wiring, as shown by the dotted lines in connection diagram 1, to reverse the phase sequence and check that the K8AK operates.
Phase loss
Create a phase loss for any input phase and check that the K8AK operates.

Questions and Answers

Q Load-side Phase Loss

A In principle, phase loss cannot be detected on the load side because the K8AK-PM measures three-phase voltage to determine phase loss.

Q Motor Load Phase Loss during Operation

A Motor load phase loss cannot be detected during operation. It can be used to detect phase loss at startup.
Normally, three-phase motors will continue to rotate even if one phase is open. The three-phase voltage will be induced at the motor terminals. The diagram shows voltage induction at the motor terminals when phase R has been lost with a load applied to a three-phase motor. The horizontal axis shows the motor load as a percentage of the rated load, and the vertical axis shows voltage as a percentage of the rated voltage. The lines in the graph show the voltage induced at the motor terminals for each load phase loss occurs during operation. As the graph shows, phase loss cannot be detected because the motor terminal voltage does not drop very much even if a phase is lost when the load on the motor is light. To detect motor load phase loss during operation, use the undervoltage detection function to detect the motor terminal voltages at phase loss.
Set the operating time carefully because it will affect the time from when the phase loss occurs until tripping when this function is used.

Characteristic Curve Diagram

Note: This characteristic curve shows the approximate values only.

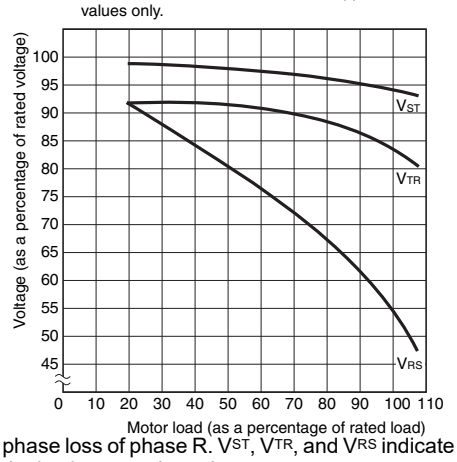

Note: For phase loss of phase R. V_{ST}, V_{TR}, and V_{RS} indicate the motor terminal voltage at phase loss.

Q Overvoltage Detection When Only One Phase Exceeds the Overvoltage Set Value

A The K8AK monitors each of the three-phase voltages. This means an overvoltage is detected even if only one phase exceeds the set value. The same applies to undervoltages.

Safety Precautions

Be sure to read the precautions for all models in the website at the following URL: http://www.ia.omron.com/.

Warning Indications

⚠ WARNING	Indicates a potentially hazardous situation which, if not avoided, will result in minor or moderate injury, or may result in serious injury or death. Additionally there may be significant property damage.
⚠ CAUTION	Indicates a potentially hazardous situation which, if not avoided, may result in minor or moderate injury or in property damage.
Precautions for Safe Use	Supplementary comments on what to do or avoid doing, to use the product safely.
Precautions for Correct Use	Supplementary comments on what to do or avoid doing, to prevent failure to operate, malfunction, or undesirable effects on product performance.

Meaning of Product Safety Symbols

	Used to warn of the risk of electric shock under specific conditions.
	Used for general prohibitions for which there is no specific symbol.
	Used to indicate prohibition when there is a risk of minor injury from electrical shock or other source if the product is disassembled.
	Used for general mandatory action precautions for which there is no specified symbol.

⚠ WARNING

Electrical shock may occasionally cause serious injury. Confirm that the input voltage is OFF before starting any wiring work and wire all connections correctly.

⚠ CAUTION

Electrical shock may cause minor injury.
Do not touch terminals while electricity is being supplied.

There is a risk of minor electrical shock, fire, or device failure. Do not allow any pieces of metal, conductors, or cutting chips that occur during the installation process to enter the product.

Explosions may cause minor injuries. Do not use the product in locations with inflammable or explosive gases.

There is a risk of minor electrical shock, fire, or device failure. Do not disassemble, modify, repair, or touch the inside of the product.

Loose screws may cause fires. Tighten terminal screws to the specified torque of 0.49 to 0.59 N·m.

Use of excessive torque may damage the terminal screws. Tighten terminal screws to the specified torque of 0.49 to 0.59 N·m.

Use of the product beyond its life may result in contact welding or burning. Make sure to consider the actual operating conditions and use the product within its rated load and electrical life count. The life of the output relay varies significantly with the switching capacity and switching conditions.

Precautions for Safe Use

1. Do not use or store the product in the following locations.
   - Locations subject to water or oil
   - Outdoor locations or under direct sunlight
   - Locations subject to dust or corrosive gases (particularly sulfurizing gases, ammonia, etc.)
   - Locations subject to rapid temperature changes
   - Locations prone to icing and dew condensation
   - Locations subject to excessive vibration or shock
   - Locations subject to wind and rain
   - Locations subject to static electricity and noise
   - Habitats of insects or small animals
2. Use and store the product in a location where the ambient temperature and humidity are within the specified ranges. If applicable, provide forced cooling.
3. Mount the product in the correct direction.
4. Do not wire the input and output terminals incorrectly.
5. Make sure the input voltage and loads are within the specifications and ratings for the product.
6. Make sure the crimp terminals for wiring are of the specified size.
7. Do not connect anything to terminals that are not being used.
8. Use a power supply that will reach the rated voltage within 1 second after the power is turned ON.
9. Keep wiring separate from high voltages and power lines that draw large currents.
   Do not place product wiring in parallel with or in the same path as high-voltage or high-current lines.
10. Do not install the product near equipment that generates high frequencies or surges.
11. The product may cause incoming radio wave interference. Do not use the product near radio wave receivers.
12. Install an external switch or circuit breaker and label it clearly so that the operator can quickly turn OFF the power supply.
13. Make sure the indicators operate correctly. Depending on the application environment, the indicators may deteriorate prematurely and become difficult to see.
14. Do not use the product if it is accidentally dropped. The internal components may be damaged.
15. Be sure you understand the contents of this catalog and handle the product according to the instructions provided.
16. Do not install the product in any way that would place a load on it.
17. When discarding the product, properly dispose of it as industrial waste.
18. The product must be handled only by trained electrician.
19. Prior to operation, check the wiring before you supply power to the product.
20. Do not install the product immediately next to heat sources.
21. Perform periodic maintenance.
22. Transient surge suppression shall be installed on the line side of this equipment and shall be rated 600 V (phase-to-ground), suitable for Overvoltage Category II, and shall provide protection for a rated impulse withstand voltage peak of 4 kV or equivalent.

Precautions for Correct Use

Observe the following operating methods to prevent failure and malfunction.

1. Use the input power and other power supplies and converters with suitable capacities and rated outputs.
2. Use a precision screwdriver or similar tool to adjust the setting knobs.
3. The distortion in the input waveform must be 30% max. If the input waveform is distorted beyond this level, it may cause unnecessary operation.
4. The product cannot be used for thyristor control or on the secondary side of an inverter. To use the product on the primary side of an inverter, install a noise filter on the primary side of the inverter.
5. To reduce the error in the setting knob, always turn the setting knob from the minimum setting toward the maximum setting.
6. Phase loss is detected only when the power supply to the motor is turned ON. Phase loss during motor operation is not detected.
7. Phase loss can be detected only from the input contacts to the power supply side. Phase loss cannot be detected from the input contacts to the load side.
8. When cleaning the product, do not use thinners or solvents. Use commercial alcohol.

Correct Mounting Direction, Mounting, and Removing

- Mounting to DIN Track
  1. Attach the product to the DIN Track with the tab at the top and the hooks at the bottom.
  2. Push the product onto the Track until the hooks lock into place.

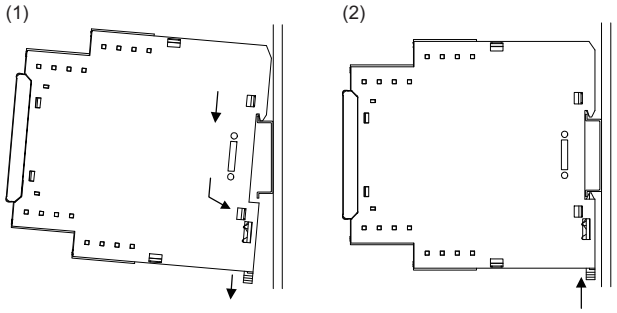

- Removing from the DIN Track
  Pull down on the bottom hook with a flat-blade screwdriver and lift up on the product.

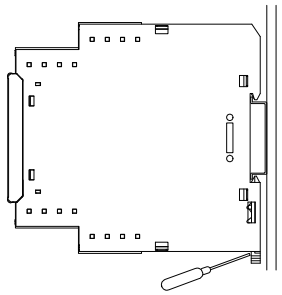

Applicable DIN Tracks:
PFP-100N (100 cm)
PFP-50N (50 cm)

Adjusting the Setting Knobs

- Use a screwdriver to adjust the setting knobs. The knobs have a stopper that prevents them from turning beyond the full right or left position. Do not force a knob beyond these points.

MEMO

Terms and Conditions Agreement

Read and understand this catalog.

Please read and understand this catalog before purchasing the products. Please consult your OMRON representative if you have any questions or comments.

Warranties.

(a) Exclusive Warranty. Omron's exclusive warranty is that the Products will be free from defects in materials and workmanship for a period of twelve months from the date of sale by Omron (or such other period expressed in writing by Omron). Omron disclaims all other warranties, express or implied.

(b) Limitations. OMRON MAKES NO WARRANTY OR REPRESENTATION, EXPRESS OR IMPLIED, ABOUT NON-INFRINGEMENT, MERCHANTABILITY OR FITNESS FOR A PARTICULAR PURPOSE OF THE PRODUCTS. BUYER ACKNOWLEDGES THAT IT ALONE HAS DETERMINED THAT THE PRODUCTS WILL SUITABLY MEET THE REQUIREMENTS OF THEIR INTENDED USE.

Omron further disclaims all warranties and responsibility of any type for claims or expenses based on infringement by the Products or otherwise of any intellectual property right. (c) Buyer Remedy. Omron's sole obligation hereunder shall be, at Omron's election, to (i) replace (in the form originally shipped with Buyer responsible for labor charges for removal or replacement thereof) the non-complying Product, (ii) repair the non-complying Product, or (iii) repay or credit Buyer an amount equal to the purchase price of the non-complying Product; provided that in no event shall Omron be responsible for warranty, repair, indemnity or any other claims or expenses regarding the Products unless Omron's analysis confirms that the Products were properly handled, stored, installed and maintained and not subject to contamination, abuse, misuse or inappropriate modification. Return of any Products by Buyer must be approved in writing by Omron before shipment. Omron Companies shall not be liable for the suitability or unsuitability or the results from the use of Products in combination with any electrical or electronic components, circuits, system assemblies or any other materials or substances or environments. Any advice, recommendations or information given orally or in writing, are not to be construed as an amendment or addition to the above warranty.

See http://www.omron.com/global/ or contact your Omron representative for published information.

Limitation on Liability; Etc.

OMRON COMPANIES SHALL NOT BE LIABLE FOR SPECIAL, INDIRECT, INCIDENTAL, OR CONSEQUENTIAL DAMAGES, LOSS OF PROFITS OR PRODUCTION OR COMMERCIAL LOSS IN ANY WAY CONNECTED WITH THE PRODUCTS, WHETHER SUCH CLAIM IS BASED IN CONTRACT, WARRANTY, NEGLIGENCE OR STRICT LIABILITY.

Further, in no event shall liability of Omron Companies exceed the individual price of the Product on which liability is asserted.

Suitability of Use.

Omron Companies shall not be responsible for conformity with any standards, codes or regulations which apply to the combination of the Product in the Buyer's application or use of the Product. At Buyer's request, Omron will provide applicable third party certification documents identifying ratings and limitations of use which apply to the Product. This information by itself is not sufficient for a complete determination of the suitability of the Product in combination with the end product, machine, system, or other application or use. Buyer shall be solely responsible for determining appropriateness of the particular Product with respect to Buyer's application, product or system. Buyer shall take application responsibility in all cases.

NEVER USE THE PRODUCT FOR AN APPLICATION INVOLVING SERIOUS RISK TO LIFE OR PROPERTY OR IN LARGE QUANTITIES WITHOUT ENSURING THAT THE SYSTEM AS A WHOLE HAS BEEN DESIGNED TO ADDRESS THE RISKS, AND THAT THE OMRON PRODUCT(S) IS PROPERLY RATED AND INSTALLED FOR THE INTENDED USE WITHIN THE OVERALL EQUIPMENT OR SYSTEM.

Programmable Products.

Omron Companies shall not be responsible for the user's programming of a programmable Product, or any consequence thereof.

Performance Data.

Data presented in Omron Company websites, catalogs and other materials is provided as a guide for the user in determining suitability and does not constitute a warranty. It may represent the result of Omron's test conditions, and the user must correlate it to actual application requirements. Actual performance is subject to the Omron's Warranty and Limitations of Liability.

Change in Specifications.

Product specifications and accessories may be changed at any time based on improvements and other reasons. It is our practice to change part numbers when published ratings or features are changed, or when significant construction changes are made. However, some specifications of the Product may be changed without any notice. When in doubt, special part numbers may be assigned to fix or establish key specifications for your application. Please consult with your Omron's representative at any time to confirm actual specifications of purchased Product.

Errors and Omissions.

Information presented by Omron Companies has been checked and is believed to be accurate; however, no responsibility is assumed for clerical, typographical or proofreading errors or omissions.

Note: Do not use this document to operate the Unit.

OMRON Corporation **Industrial Automation Company**

Kyoto, JAPAN **Contact : www.ia.omron.com**

Regional Headquarters

OMRON EUROPE B.V.
Wegalaan 67-69, 2132 JD Hoofddorp
The Netherlands
Tel: (31) 2356-81-300 Fax: (31) 2356-81-388

OMRON ELECTRONICS LLC
2895 Greenspoint Parkway, Suite 200
Hoffman Estates, IL 60169 U.S.A.
Tel: (1) 847-843-7900 Fax: (1) 847-843-7787

OMRON ASIA PACIFIC PTE. LTD.
438B Alexandra Road, #08-01/02 Alexandra
Technopark, Singapore 119968
Tel: (65) 6835-3011 Fax: (65) 6835-3011

OMRON (CHINA) CO., LTD.
Room 2211, Bank of China Tower,
200 Yin Cheng Zhong Road,
PuDong New Area, Shanghai, 200120, China
Tel: (86) 21-6023-0333 Fax: (86) 21-5037-2388

Authorized Distributor:

©OMRON Corporation 2014-2026 All Rights Reserved.
In the interest of product improvement,
specifications are subject to change without notice.

CSM_3_8

Cat. No. N185-E1-04 1026 (0314)