Environment-resistant IP67 Power Supply /
DC Blocking Box
S8NR-S/S8R-BB

Easily configure power supply and safety circuits outside the control panel

IP67 compliance and integrated functionality simplify the construction of power and safety circuits outside of control panels

Omron's IP67-rated power supplies and Forcible Guided Relay can be installed outside the control panel and close to the equipment, allowing for flexible adaptations to line changes. They drive the evolution of production sites --from design and startup to maintenance and safety circuit construction. Furthermore, the IO-Link functionality in these power supplies enables remote parameter setting and monitoring, significantly improving efficiency in both commissioning and maintenance.

S8NR-S stands out with built-in electronic circuit protectors, delivering multi-channel output that reduces wiring and installation effort—even when installed outside the control panel.

Environment-resistant IP67 Power Supply S8NR-S

IO-Link IO-Link

90 W

360 W
(Built-in circuit protectors)

600 W
(Built-in circuit protectors)

IP67-Rated Forcible Guided Relay (G7SA/G7S-□-E) Enable Conventional Safety Circuits Outside the Control Panel

DC Blocking Box S8R-BB

Rated current 6 A

Rated current 10 A

Note 1: The models shown above are representative examples.
Note 2: All models are equipped with M12 connectors and screwless terminals(Smartclick) as standard.
Smartclick is a trademark or registered trademark of OMRON Corporation in Japan and other countries.

Solves in-panel challenges while improving commissioning and maintenance efficiency outside the panel.

Design

Solves in-panel space and heat issues p4

Functional integration reduces the engineering effort required for designing and selecting external circuits p5

Startup

Reduces the workload of on-site workers through more efficient installation and wiring p6

Display and monitoring support efficient commissioning p8

Maintenance

Minimizes downtime through preventive maintenance and rapid identification of faulty locations p10

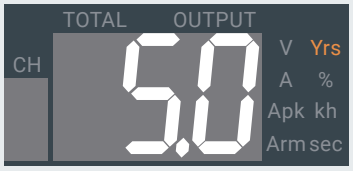

Replacement timing notification

Remaining current display

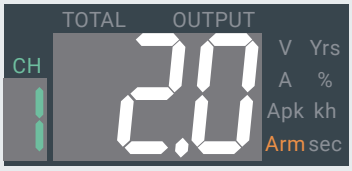

Design

Solves in-panel space and heat issues. Functional integration reduces the engineering effort required for designing and selecting external circuits

In addition to an IP67 power supply with built-in electronic circuit protectors, the DC Blocking box enables power and safety circuits to be constructed outside the control panel with reduced effort.

Contributes to space saving and simplified thermal design inside control panels

Conventional

As the number of components increases, securing space and designing thermal management inside the control panel become difficult.

Installed individually inside the control panel: power supply, circuit protectors, terminal blocks, and Forcible Guided Relay

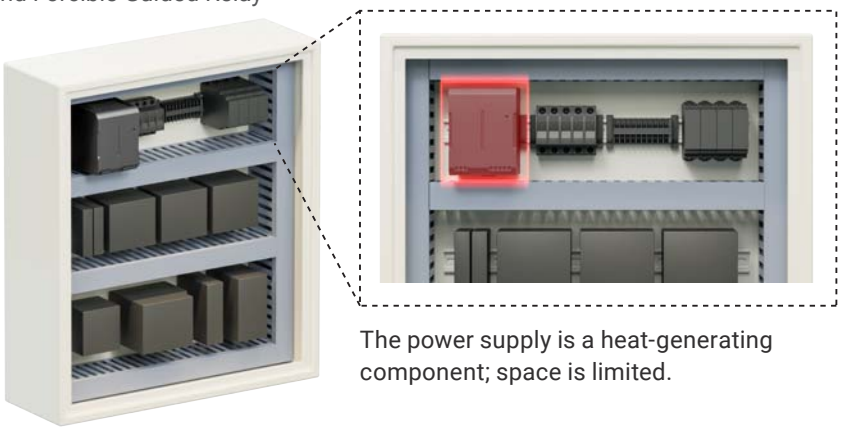

The power supply is a heat-generating component; space is limited.

Time-consuming thermal design inside the control panel (fan requirements, airflow rate, and airflow path)

Layout planning → Thermal design

This product

By functionally integrating heat-generating power supplies and peripheral circuits and installing them outside the control panel, space constraints and thermal design challenges are resolved.

Through functional integration, the power supply and DC Blocking Box are installed outside the control panel.

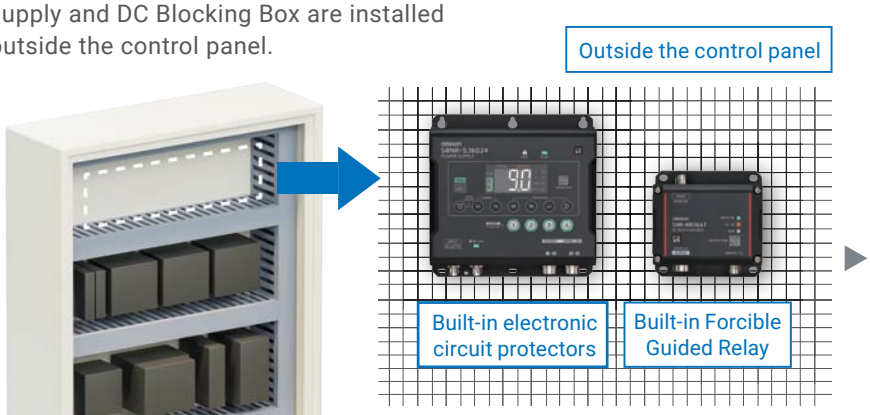

Eliminates in-panel heat sources, enabling fanless design and a more compact control panel

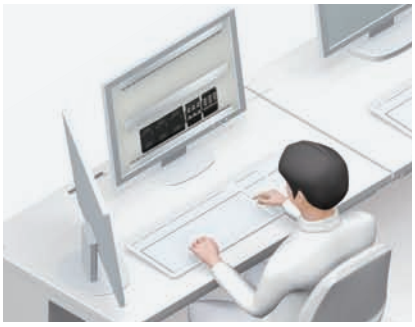

Eliminates the need for thermal simulation studies

Reduces thermal design effort by 30%*

Layout planning → Thermal design

*. This is an estimated result based on our standard model. Actual labor-hour reduction effects may vary depending on the system configuration and operating conditions.

Contributes to reducing the effort required for off panel circuit design and component selection

Conventional

A large number of in-panel circuit components increases the effort required for circuit design and component selection

Complex circuit configuration

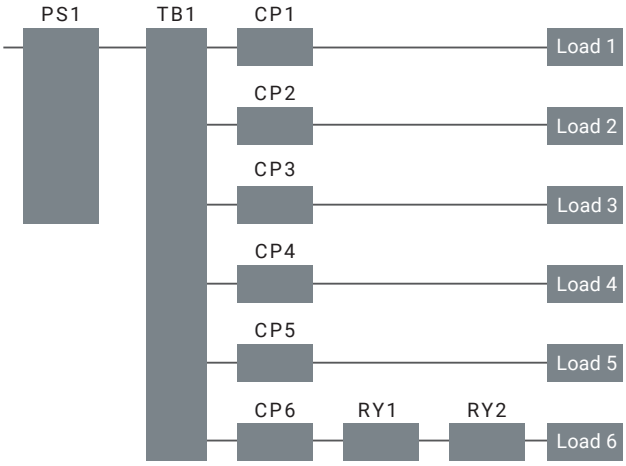

10 selected components

Component ID	Model
PS1	Power supply
TB1	Terminal block
CP1	Mechanical circuit protector (Mechanical CP)
CP2	Mechanical circuit protector (Mechanical CP)
CP3	Mechanical circuit protector (Mechanical CP)
CP4	Mechanical circuit protector (Mechanical CP)
CP5	Mechanical circuit protector (Mechanical CP)
CP6	Mechanical circuit protector (Mechanical CP)
RY1	Forcible Guided Relay
RY2	Forcible Guided Relay

Circuit design → Component selection

This product

Functional integration enabled by built-in electronic circuit protectors contributes to reduced engineering effort

Simple circuit configuration

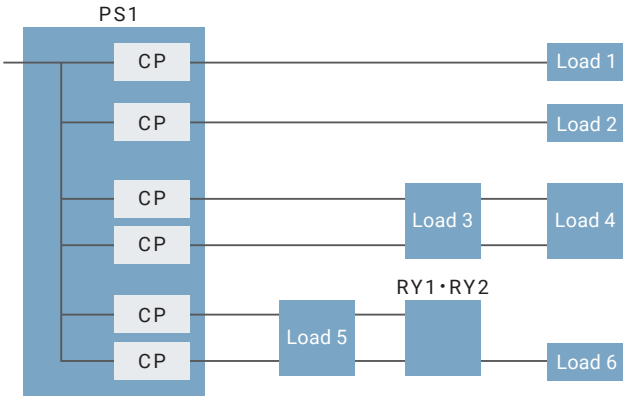

Only two selected components

Component ID	Type
PS1	IP67 power supply (with six built-in electronic circuit protectors)
RY1/RY2	DC Blocking Box (with two built-in Forcible Guided Relay)

Circuit design → Component selection

Selection effort 80%

∗. Based on internal research

Startup

Reduces the workload of on-site workers through more efficient installation and wiring

Intuitive installation and wiring reduce installation time, easing the burden on on-site operators and improving layout flexibility.

Easy installation using keyhole mounting, similar to hanging a wall clock

Standard screw holes

With conventional screw mounting, two operators are required, and once fixed, repositioning is time-consuming.

S8NR-S

The keyhole mounting structure allows screws to be temporarily fastened first, followed by easy position adjustment, enabling one-person installation.

Keyhole mounting

DIN rail mounting simplifies installation and replacement work

In addition to screw mounting, DIN rail mounting is also supported. Simply snap the unit onto the rail for quick installation. Position adjustments can be easily made by sliding the unit left or right on the DIN rail, allowing flexible response to equipment modifications or specification changes.

DIN rail mounting bracket : order seperately

Tool-free connector connection significantly reduces wiring time

Screw-type connector

With conventional screw-type connectors, tightening is time-consuming and torque management is required

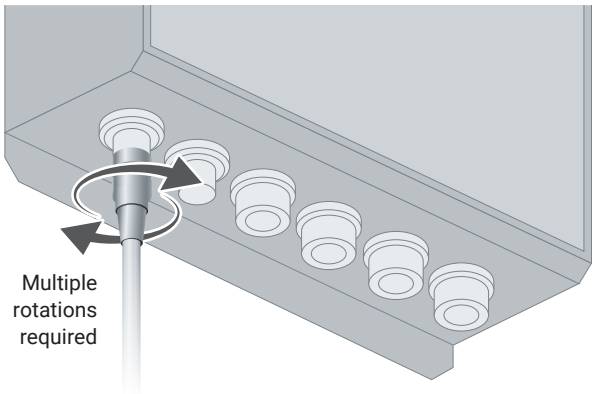

Screw-type connector : 12 seconds

S8NR-S
S8R-BB

With Smartclick connectors, secure connection is achieved with just a 1/8 turn

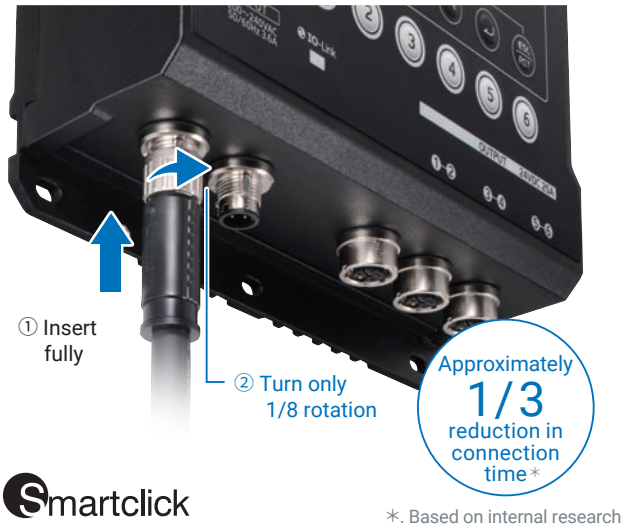

*. Based on internal research

Smartclick connector : 4 seconds

Build Safety Circuits Outside the Control Panel with Reduced Wiring

Safety circuits can be easily installed outside the control panel using an IP67-rated DC Blocking Box with a built-in Forcible Guided Relay. With the reduced-wiring configuration(using a 8—pin model), the DC Blocking Box and the Safety I/O Block can be connected using a single signal cable, significantly reducing wiring work and installation time.

General Configuration(using a 5-pin model)

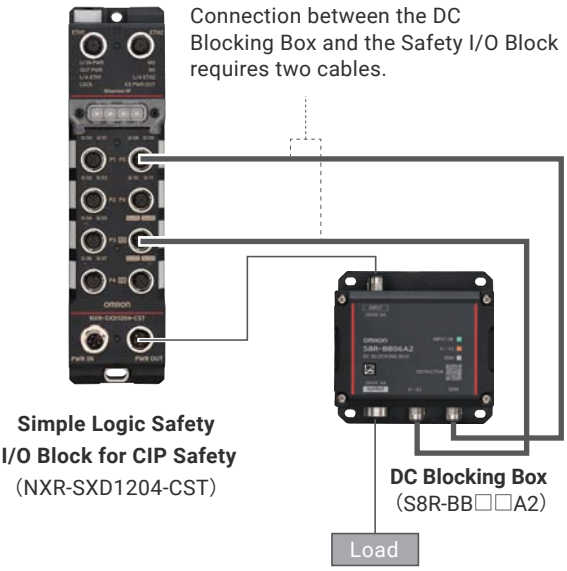

Reduced-wiring Configuration(using a 8-pin model)

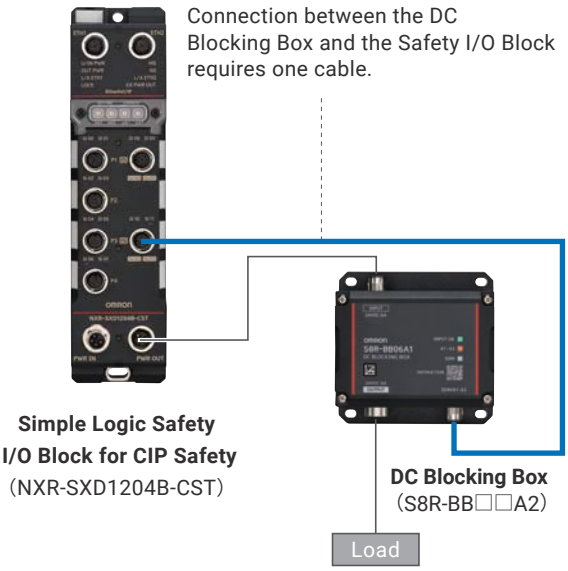

Smooth and Efficient Startup with Clear Status Visualization

With the built-in digital display, measured and setting values can be easily monitored, reducing adjustment errors and allowing fast commissioning.

Work efficiency is also improved during testing and recovery operations.

The high-visibility digital display allows anyone to easily and accurately check operating status and configure settings, improving work efficiency.

No tester is required—values can be confirmed using the display only.

The IP67 power supply adopts a connector-based connection method designed with a focus on water and dust resistance as well as ease of wiring, and features a highly visible digital display that allows users to check voltage and current status at a glance without using a tester.

Voltage display

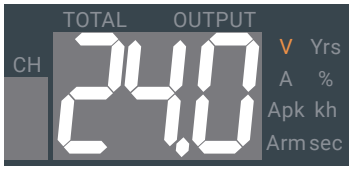

Current display

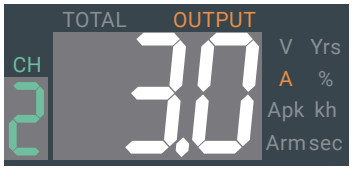

IO-Link

Channel-by-channel ON/OFF switching is possible with a single button press.

Work efficiency is improved during testing and recovery operations.

IO-Link communication function

Remote configuration of parameters and channel ON/OFF switching are supported.
During parameter setting and verification, the IP67 power supply does not require an AC input and can be operated solely with power supplied from the IO-Link master.
Pre-configuration minimizes on-site work and reduces startup time.

Precise Configuration of Each Circuit Helps Prevent Startup Issues

By setting the cutoff current to match the wire gauge, thinner wires can be used. Fine control of the startup sequence further helps prevent on-site issues.

Each channel is equipped with an electronic circuit protector (CP), and the cut-off current can be set in 0.1 A increments.

Conventional

With rotary switches, the cut-off current can only be set in increments of 1 A or more.

S8NR-S

On the digital display, the cutoff current can be finely set in 0.1 A increments, enabling the use of thinner wires.

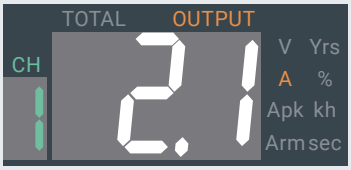

The startup sequence for each channel can be set in 0.1-second increments.

Conventional

When all loads connected to the power supply start simultaneously, inrush current may prevent the power supply from starting up.

Inrush current > Overcurrent protection operating point
Startup Failure

General-purpose power supply

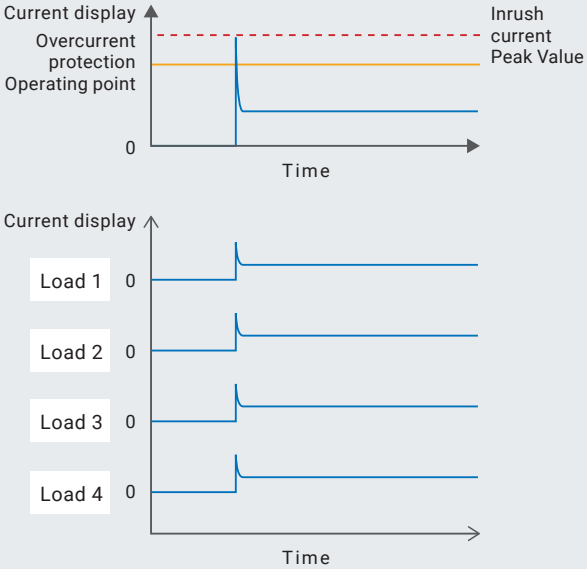

S8NR-S

By staggering the startup timing of each load, inrush current is reduced and on-site startup issues can be avoided.

*Enabled by default at shipment; operates with a 0.4-second delay.

Inrush current > Overcurrent protection operating point
Normal startup

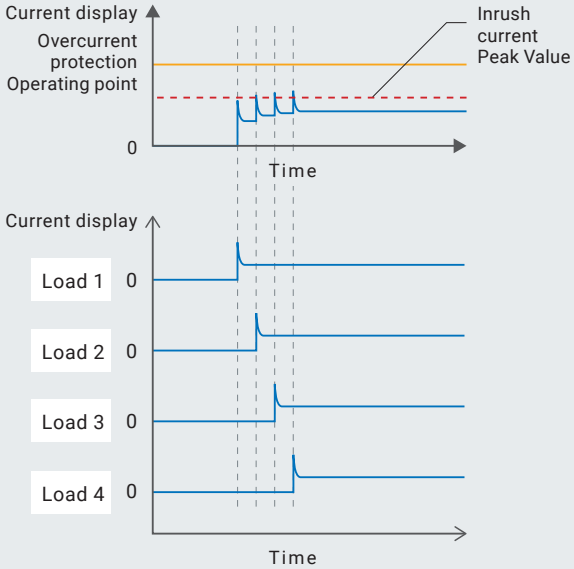

Minimize Downtime through Predictive Maintenance and Easy Fault Identification

By visualizing the power supply status, preventive maintenance and identification of abnormal points become easier, enabling fast and efficient maintenance.

Clear Status Indication with LEDs and Monitor

The power supply status can be checked at a glance using LEDs and the monitor, helping to reduce maintenance work.

Advance Maintenance with Replacement Timing Notification

By visualizing the remaining service life, preventive maintenance becomes possible, reducing downtime caused by sudden line stoppages.

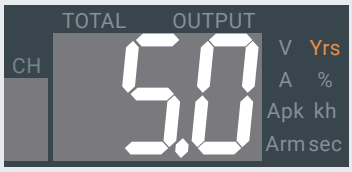

5.0 Yrs :Time to Replacement: 5.0 years

Remaining Current Display for Easy Expansion Decisions

The remaining current of each channel is displayed, allowing immediate judgment on whether additional devices can be connected and helping to shorten evaluation time.

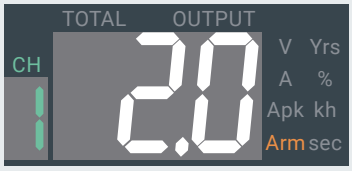

CH1 2.0A : Remaining Current Value

Easy Identification of Faulty Channels with Electronic CP per Channel

Each channel is equipped with an electronic circuit protector (CP).
The operating status of each channel can be easily checked via channel-specific LEDs, reducing maintenance effort.
In addition, the operating status of each channel can also be monitored via IO-Link communication.

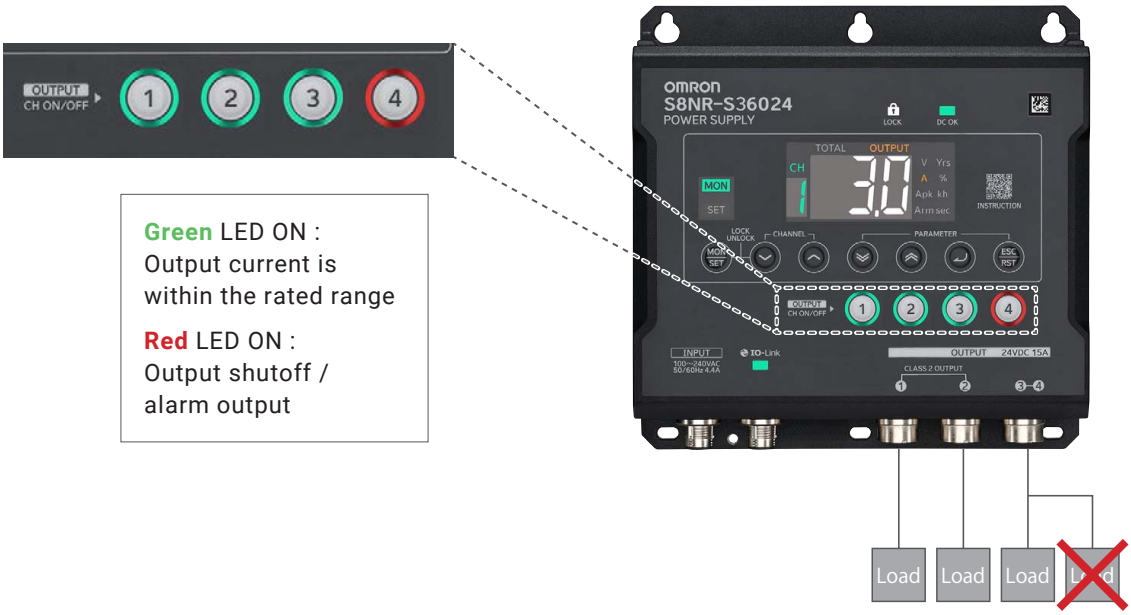

Improved Maintenance Efficiency with Remote Parameter Monitoring and Configuration

IO-Link communication enables remote monitoring and configuration of various parameters, as well as channel-by-channel ON/OFF control.
This improves on-site work efficiency after startup.

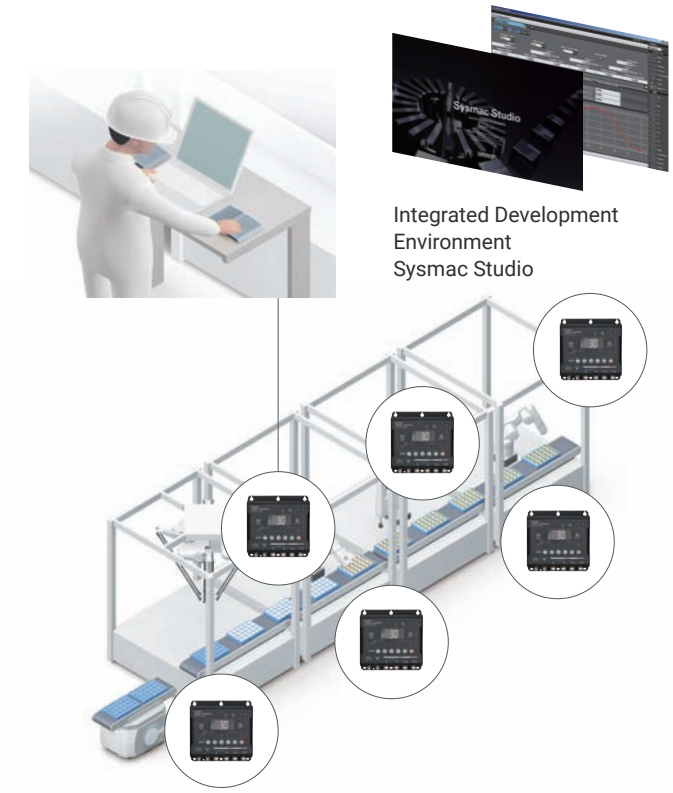

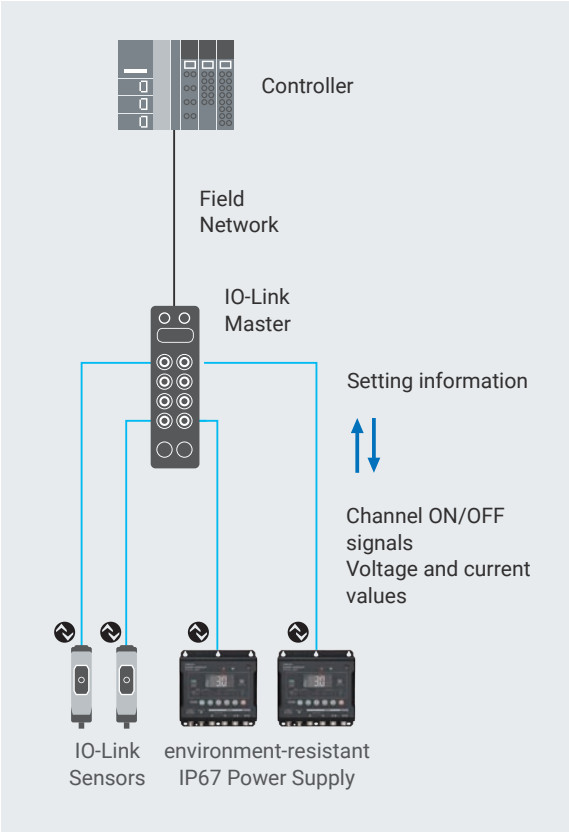

Key Lock Function Prevents Misoperation

The key lock function helps prevent problems caused by accidental changes to display screens or settings.
In addition, IO-Link communication allows disabling setting changes and channel ON/OFF key operations on the power supply unit itself.
In monitor mode, only display switching and key lock operations are enabled.

MEMO

Environment-resistant IP67 Power Supply

S8NR-S

IP67-rated power supply enables easy implementation of power circuits outside control panels. A lineup of 90 W, 360 W, and 600 W models allows optimal power supply selection according to equipment scale.

Smartclick

For the most recent information on models that have been certified for safety standards, refer to your OMRON website

⚠ **Please refer to *Power Supply Common Precautions* and *Safety Precautions* on page 44.**

<Common Features (90 W/360 W/600 W)>
- Installation outside control panels shortens wiring distances, helping to reduce wiring and installation work.
- Compact and lightweight design allows flexible installation even in limited spaces.
- Smart click connectors simplify wiring work.

<Features of 360 W/600 W Models>
- Integrated package combining three functions: Power Supply, Protection, and Connection (Compact design and reduced wiring)
- Multiple electronic circuit protectors provided for multi-point protection
- Digital display enables monitoring of power circuit status without measurement (Output voltage, output current, remaining current, replacement notification, etc.)
- Remote parameter setting and monitoring via IO-Link communication
- Prevention of incorrect operation through key lock function and protection level settings

Model Number Structure

Model Number Legend

S8NR-□□□□□□-□□□□□□□□□

Series 1 2 3 4 5

1. **Input Voltage Specification**
   S: Single-phase Input

2. **Capacity**
   090: 90 W
   360: 360 W
   600: 600 W

3. **Output Voltage**
   24: 24 V

4. **Number of output connectors**
   A1L0: M12 A code: 1
   M12 L code: 0
   A0L2: M12 A code: 0
   M12 L code: 2
   A2L1: M12 A code: 2
   M12 L code: 1
   A0L3: M12 A code: 0
   M12 L code: 3
   A2L2: M12 A code: 2
   M12 L code: 2

5. **IO-Link Specifications**
   -IL3: IO-Link (COM3: 230.4 kbps)
   None: None

Smartclick is a trademark or registered trademark of OMRON Corporation in Japan and other countries.

Be sure to read and fully understand the content of the S8NR-S User's Manual (Man. No. T245) before changing settings on the S8NR-S.

Ordering Information

Main unit

Capacity	Input Voltage	Output Voltage	Maximum Tripping Output Current per a branch output	Output branch	Communication	Model
90 W	Single-phase 100 to 240 VAC	24 V	---	---	---	**S8NR-S09024-A1L0**
360 W			M12-A: 3.8 A M12-L: 10 A	2 connectors 4 outputs Connector 1: 10 A, 10 A Connector 2: 10 A, 10 A	IO-Link	**S8NR-S36024-A0L2-IL3**
				3 connectors 4 outputs Connector 1: 3.8 A (Class 2) Connector 2: 3.8 A (Class 2) Connector 3: 10 A, 10 A		**S8NR-S36024-A2L1-IL3**
600 W	Single-phase 200 to 240 VAC			3 connectors 6 outputs Connector 1: 10 A, 10 A Connector 2: 10 A, 10 A Connector 3: 10 A, 10 A		**S8NR-S60024-A0L3-IL3**
				4 connectors 6 outputs Connector 1: 3.8 A (Class 2) Connector 2: 3.8 A (Class 2) Connector 3: 10 A, 10 A Connector 4: 10 A, 10 A		**S8NR-S60024-A2L2-IL3**

Mounting Brackets (Sold separately)

Name	Model
DIN-Rail mounting brackets (for S8NR-S09024)	**S82Y-NRS01DIN**
DIN-Rail mounting brackets (for S8NR-S36024 and S8NR-S60024)	**S82Y-NRS02DIN**

Waterproof Caps (Sold separately)

Name	Model
Waterproof caps for socket connectors (2 pcs./set)	**XS5Z-12**
Waterproof caps for plug connectors	**XS5Z-13**

Specifications

S8NR-S09024-A1L0

Model			S8NR-S09024-A1L0
Efficiency ✻1	100 VAC Input ✻1		91% typ.
	200 VAC Input ✻1		93% typ.
Input conditions	Input voltage allowable range ✻3		85 to 264 VAC
	Frequency ✻3		50/60 Hz(47 to 63 Hz)
	Input current		1.2 A max. (100 VAC input)
			0.6 A max. (200 VAC input)
	Power factor ✻1		0.9 min.
	Leakage current		0.5 mA max. (100 VAC input)
			1 mA max. (200 VAC input)
	Inrush current (for a cold start at 25°C)		14 A typ. (100 VAC input)
			28 A typ. (200 VAC input)
Output characteristics	Rated output current		3.8 A
	Rated output electric power		91.2 W
	Maximum boost current		---
	Voltage variable range		No voltage adjustment
	Ripple noise voltage ✻1		100 mV p-p max. (at rated input and outputs)
	Static input fluctuation		0.5% or less (at input 85 to 264 VAC, 100% load) ✻2
	Load fluctuation		1.5% or less (at rated input, 0 to 100% Load) ✻2
	Ambient temperature fluctuation		0.05%/°C max.
	Startup time ✻5		1,000 ms max ✻1
	Outputs hold time ✻5		30 ms typ. (at rated input and outputs) ✻1
Functions	Overload protection		Yes, automatic reset
	Overvoltage protection		Yes, 130% or higher of rated output voltage, power shut off (shut off the input voltage and turn on the input again)
	Series connection		Not supported.
	Parallel connection		Not supported.
	Output indicator		Provided (Color: green)
	DC OK Signal Output		Yes (MOS FET relay output 30 VDC max., 50 mA max.)
Withstand voltage	Dielectric strength voltage		2 kVAC for 1 min between (input terminals pins 1 and 3 collectively) and (PE⏚, output terminals and signal terminals collectively) Detection current: 20 mA
			500 VAC for 1 min between (output terminals collectively) and (signal terminals collectively) Detection current: 10 mA
	Insulation resistance		100 MΩ min. at 500 VDC between (input terminals pins 1 and 3 collectively) and (PE⏚, output terminals and signal terminals collectively)
Environment	Ambient operating temperature		-25 to 70°C (with no condensation or icing) ✻4
	Storage temperature		-25 to 85°C
	Ambient operating humidity		5 to 95%
	Storage humidity		5 to 95%
	Vibration resistance		10 to 55 Hz, 0.375 mm single amplitude, 2h each in X, Y, and Z directions, maximum 4.5G
	Shock resistance		150 m/s^2 3 times each in ±X, ±Y, ±Z directions.
Reliability	MTBF		135,000 hrs min.
	Expected life		10 years
Construction	Weight (main unit)		650 g max
	Cooling fan		blank
	Protective structure ✻8		IP65/IP67
	UL Enclosure Type ✻8✻9		Type 1
Compatible standards	Harmonic suppression		Conforms to EN 61000-3-2
	EMI	Conducted EMI	Compliant with EN 61204-3 Class B, EN 55011 Class B
		Radiated EMI	Compliant with EN 61204-3 Class B, EN 55011 Class B
	EMS		EN 61204-3 high severity levels
	Safety standards		UL 508 (Listing, Class2 Output: Per UL 1310), Pol3 EN/IEC 62477-1 (ES1 Output), OVCIII (<2,000 m), OVCII (2,000 m<and<3,000 m), Pol3 RCM (EN 61000-6-4) PELV (EN/IEC 60204-1)
	SEMI standards		Compliance with SEMI F47-0706 (for 200 to 240 VAC input)

Note: Refer to page 19 for ✻1 to ✻9.

S8NR-S36024-A□L□-IL3

Model			S8NR-S36024-A0L2-IL3	S8NR-S36024-A2L1-IL3
Efficiency ✻1	100 VAC Input ✻1		92% typ. (Power supply section only: 94% typ.)	
	200 VAC Input ✻1		94% typ. (Power supply section only: 96% typ.)	
Input conditions	Input voltage allowable range ✻3		85 to 264 VAC	
	Frequency ✻3		50/60 Hz (47 to 63 Hz)	
	Input current		4.0 A typ. (100 VAC input)	
			2.0 A typ. (200 VAC input)	
	Power factor		0.9 min.	
	Leakage current		0.5 mA max. (100 VAC input)	
			1 mA max. (200 VAC input)	
	Inrush current (for a cold start at 25°C)		7 A typ. (100 VAC input)	
			14 A typ. (200 VAC input)	
Output characteristics	Number of branches		4 (M12-L×2)	4 (M12-A×2, M-12L×1)
	Maximum cutoff output current (per branch)		M12-A: 3.8 A (Class 2 Output) M12-L: 10 A	
	Total output current		15 A	
	Voltage variable range		24 to 28 V (adjustable with HMI or IO-Link communication)	
	Ripple noise voltage (at rated input and outputs) ✻1		130 mV p-p max. (at 20 MHz of bandwidth)	
	Output leakage current		10 mA max.	
	Static input fluctuation		0.5% or less (at input 85 to 264 VAC, 100% load) ✻2	
	Load fluctuation		4.0% or less (at rated input, 0 to 100% Load) ✻2	
	Ambient temperature fluctuation		0.05%/°C max.	
	Startup time ✻5		2,000 ms max ✻1	
	Outputs hold time ✻5		45 ms typ. (at rated input and outputs) ✻1	
Functions	Tripping functions	Abnormal voltage tripping	24.0 to 32.0 V (in 0.1 V unit)	
		Abnormal current tripping ✻2	Setting range: M12-A: 0.5 to 3.8 A (in 0.1 A unit), M12-L: 0.5 to 10 A (in 0.1 A unit)	
		Abnormal total current tripping	The output is shut off when the total output current reaches 30 A for 1 s, 26 A for 2 s, 22.5 A for 5 s, 19.5 A for 10 s, or 18 A for 20 s.	
	Undervoltage detection functions	Undervoltage Detection	Setting range: 18.0 to 28.0 V (in 0.1 V unit)	
	Maintenance forecast monitor function	Years up to replacement time	Setting range: 0.0 to 5.0 yr (in 0.5 yr unit)	
		Percentage up to replacement time	Setting range: 0.0 to 99.9% (in 0.1% unit)	
		Total running time	Setting range: 0 to 132 kh (in 1 kh unit)	
	Display functions	Output voltage display	Display range: 16.3 to 30.0 V Display accuracy: 2% rdg ±1 digit max.	
		Output current display	Branch output current display range: 0.0 to 4.0 A (M12-A), 0.0 to 10.0 A (M12-L), Branch output peak current display range: 0.0 to 20.0 A Total output current display range: 0.0 to 40.0 A Display accuracy: M12-A 5% FS (4 A) ±1 digit max. M12-L 5% FS (10 A) ±1 digit max.	
		Maintenance forecast monitor display (yr)	Display range: FUL (Full)/HLF (Half)/0.0 to 5.0 yrs	
		Maintenance forecast monitor display (percentage)	Display range: 0.0 to 99.9%	
		Total running time	Display range: 0 to 256 kh	
	Startup sequence		Setting range: 0.0 to 99.9 seconds (0.1-second Unit) Default Branch output 1: 0.0 s Branch output 2: 0.4 s Branch output 3: 0.8 s Branch output 4: 1.2 s	
	Shutdown sequence		Setting range: 0.0 to 99.9 s (0.1 s Unit)	

Note: Refer to page 19 for ✻1 to ✻9.

Model			S8NR-S36024-A0L2-IL3	S8NR-S36024-A2L1-IL3
Functions	Series connection		Not supported.	
	Parallel connection		Not supported.	
	Output indicator		Provided (Color: green)	
	Indication monitor	Measurement/ displayed details	For details, refer to *S8NR-S Users Manual* (Man. No. T245).	
		Main display area	11-segment display (Color: white)	
		Channel display area	Seven-segment display (Color: green)	
		Unit display area	Provided (Color: yellow)	
Withstand voltage	Dielectric strength voltage		2 kVAC for 1 min between (input terminals pins 1 and 3 collectively) and (PE⏚, branch output terminals and IO-Link communications terminals collectively) Cutoff current: 20 mA	
	Insulation resistance		100 MΩ min. at 500 VDC between (PE⏚, branch output terminals and IO-Link communication terminals collectively) and (input terminals pins 1 and 3 collectively)	
Environment	Ambient operating temperature		-25 to 70°C (with no condensation or icing) ✻4	
	Storage temperature		-25 to 85°C	
	Ambient operating humidity		5 to 95%	
	Storage humidity		5 to 95%	
	Vibration resistance		10 to 55 Hz, 0.375 mm single amplitude, 2h each in X, Y, and Z directions, maximum 4.5G	
	Shock resistance		150 m/s^2 3 times each in ±X, ±Y, ±Z directions.	
Reliability	MTBF		36,000 hours min.	
	Expected life		10 years	
Construction	Weight (main unit)		1,800 g max	
	Cooling fan		blank	
	Protective structure (dustproof and waterproof) ✻8		IP65/IP67	
	UL Enclosure Type ✻8✻9		Type 1	
Compatible standards	Harmonic suppression		Conforms to EN61000-3-2	
	EMI	Conducted EMI	Compliant with EN 61204-3 Class B, EN 55011 Class B	
		Radiated EMI	Compliant with EN 61204-3 Class B, EN 55011 Class B ✻7	
	EMS		EN 61204-3 high severity levels	
	Safety standards		UL 508 (Listing, Class2 Output: Per UL 1310), Pol3 ✻6 CSA C22.2 No.107.1 (Class2 Output: Per CSA C22.2 No.223), Pol3 ✻6 EN/IEC 62477-1 (ES1 Output), OVCIII (<2,000 m), OVCII (2,000 m< and <3,000 m), Pol3 RCM (EN 61000-6-4) PELV (EN/IEC 60204-1)	
	SEMI standards		Compliance with SEMI F47-0706 (for 200 to 240 VAC input)	

Note: Refer to page 19 for ✻1 to ✻9.

S8NR-S60024-A□L□-IL3

Model			S8NR-S60024-A0L3-IL3	S8NR-S60024-A2L2-IL3
Efficiency ✻1	**200 VAC input ✻1**		94% typ. (Power supply section only: 95% typ.)	
Input conditions	**Input voltage allowable range ✻3**		170 to 264 VAC	
	Frequency ✻3		50/60 Hz (47 to 63Hz)	
	Input current		3.2 A typ. (200 VAC input)	
	Power factor		0.9 min.	
	Leakage current		1 mA max. (200 VAC input)	
	Inrush current (for a cold start at 25°C)		14 A typ. (200 VAC input)	
Output characteristics	**Number of branches**		6 (M12-L×3)	6 (M12-A×2, M-12L×2)
	Maximum cutoff output current (per branch)		M12-A: 3.8 A (Class 2 Output) M12-L: 10 A	
	Total output current		25 A	
	Voltage variable range		24 to 28 V (adjustable with HMI or IO-Link communication)	
	Ripple noise voltage (at rated input and outputs) ✻1		180 mV p-p max. (at 20 MHz of bandwidth)	
	Output leakage current		10 mA max.	
	Static input fluctuation		0.5% or less (at input 170 to 264 VAC, 100% load) ✻2	
	Load fluctuation		4.0% or less (at rated input, 0 to 100% Load) ✻2	
	Ambient temperature fluctuation		0.05%/°C max.	
	Startup time ✻5		2,000 ms max ✻1	
	Outputs hold time ✻5		20 ms typ. (at rated input and outputs) ✻1	
Functions	**Tripping functions**	**Abnormal voltage tripping**	24.0 to 32.0 V (in 0.1 V unit)	
		Abnormal current tripping✻2	Setting range: M12-A: 0.5 to 3.8 A (in 0.1 A unit), M12-L: 0.5 to 10 A (in 0.1 A unit)	
		Abnormal total current tripping	The output is shut off when the total output current reaches 43.5 A for 2 s, 37.5 A for 5 s, 32.5 A for 10 s, or 30 A for 20 s	
	Undervoltage detection functions	**Undervoltage Detection**	Setting range: 18.0 to 28.0 V (in 0.1 V unit)	
	Maintenance forecast monitor function	**Years up to replacement time**	Setting range: 0.0 to 5.0 yr (in 0.5 yr unit)	
		Percentage up to replacement time	Setting range: 0.0 to 99.9% (in 0.1% unit)	
		Total running time	Setting range: 0 to 132 kh (in 1 kh unit)	
	Display functions	**Output voltage display**	Display range: 16.3 to 30.0 V Display accuracy: 2% rdg ±1 digit max.	
		Output current display	Branch output current display range: 0.0 to 4.0 A (M12-A), 0.0 to 10.0 A (M12-L), Branch output peak current display range: 0.0 to 20.0 A Total output current display range: 0.0 to 40.0 A Display accuracy: M12-A 5% FS (4 A) ±1 digit max. M12-L 5% FS (10 A) ±1 digit max.	
		Maintenance forecast monitor display (yr)	Display range: FUL (Full)/HLF (Half)/0.0 to 5.0 yrs	
		Maintenance forecast monitor display (percentage)	Display range: 0.0 to 99.9%	
		Total running time	Display range: 0 to 256 kh	
	Startup sequence		Setting range: 0.0 to 99.9 seconds (0.1-second Unit) Default Branch output 1: 0.0 s Branch output 2: 0.4 s Branch output 3: 0.8 s Branch output 4: 1.2 s Branch output 5: 1.6 s Branch output 6: 2.0 s	
	Shutdown sequence		Setting range: 0.0 to 99.9 s (0.1 s Unit)	

Note: Refer to page 19 for ✻1 to ✻9.

Model			S8NR-S60024-A0L3-IL3	S8NR-S60024-A2L2-IL3
Functions	Series connection		Not supported	
	Parallel connection		Not supported	
	Output indicator		Provided (Color: green)	
	Indication monitor	Measurement/ displayed details	For details, refer to *S8NR-S Users Manual* (Man. No. T245).	
		Main display area	11-segment display (Color: white)	
		Channel display area	Seven-segment display (Color: green)	
		Unit display area	Provided (Color: yellow)	
Withstand voltage	Dielectric strength voltage		2 kVAC for 1 min between (input terminals pins 1 and 3 collectively) and (PE⏚, branch output terminals and IO-Link communications terminals collectively) Cutoff current: 20 mA	
	Insulation resistance		100 MΩ min. at 500 VDC between (PE⏚, branch output terminals and IO-Link communication terminals collectively) and (input terminals pins 1 and 3 collectively)	
Environment	Ambient operating temperature		-25 to 70°C (with no condensation or icing) ✻4	
	Storage temperature		-25 to 85°C	
	Ambient operating humidity		5 to 95%	
	Storage humidity		5 to 95%	
	Vibration resistance		10 to 55 Hz, 0.375 mm single amplitude, 2h each in X, Y, and Z directions, maximum 4.5G	
	Shock resistance		150 m/s^2 3 times each in ±X, ±Y, ±Z directions.	
Reliability	MTBF		36,000 hours min.	
	Expected life		10 years	
Construction	Weight (main unit)		1,800 g max	
	Cooling fan		blank	
	Protective structure (dustproof and waterproof) ✻8		IP65/IP67	
	UL Enclosure Type ✻8✻9		Type 1	
Compatible standards	Harmonic suppression		Conforms to EN61000-3-2	
	EMI	Conducted EMI	Compliant with EN 61204-3 Class B, EN 55011 Class B	
		Radiated EMI	Compliant with EN 61204-3 Class B, EN 55011 Class B ✻7	
	EMS		EN 61204-3 high severity levels	
	Safety standards		UL 508 (Listing, Class2 Output: Per UL 1310), Pol3 ✻6 CSA C22.2 No.107.1 (Class2 Output: Per CSA C22.2 No.223), Pol3 ✻6 EN/IEC 62477-1 (ES1 Output), OVCIII (<2,000 m), OVCII (2,000 m< and <3,000 m), Pol3 RCM (EN 61000-6-4) PELV (EN/IEC 60204-1)	
	SEMI standards		Compliance with SEMI F47-0706 (for 200 to 240 VAC input)	

✻1. Rated input/output conditions: at rated input voltage, rated frequency, rated output voltage, rated total output current, and maximum cutoff output current.
✻2. 100% Load condition: at rated output voltage, rated total output current and maximum cutoff output current.
✻3. Although some inverters have an output frequency of 50/60 Hz, they may cause internal temperature to rise and result in damage, if they are connected as the power source for the S8NR-S. Do not use the output from an inverter as the power source for the S8NR-S.
✻4. For details, refer to *Derating curve* on page 27.
✻5. For details, refer to *Inrush current, startup time, Outputs hold time* on page 47.
✻6. Class2 Output is only for M12-A output
✻7. When IO-Link communication is used, this product is classified as Class A.
✻8. With waterproof caps attached to unused terminals.
✻9. The IP rating (protection against dust and water) and the UL Enclosure Type (enclosure classification) are based on different evaluation criteria. The UL Enclosure Type 1 of this product is provided to meet the enclosure requirements of UL 508A and NFPA 79.

IO-Link Specifications

Item	Description
IO-Link Specifications	Ver 1.1.4
Baud rate	COM3: 230.4 kbps (fixed)
Device profile	Common Profile, Locator
Minimum cycle time	COM3: 2.0 ms
Data length	PD size: 22 byte OD size: 1 byte (M-sequence type: TYPE_2_V)
Port class	ClassA

Please contact your OMRON sales representative regarding the IO-Link setup file (IODD file).

IO-Link Indicator LEDs

The LED indications are prioritized in the order listed from top to bottom in this table.
When multiple statuses occur simultaneously, the indication listed higher in the table is displayed.

Indicator	Status	Description
Green flashing (fast)	Locator active	Flashes twice and then turns OFF repeatedly at a 1-second cycle for 10 minutes. This function allows the product to be visually identified among multiple devices at the installation site. For start/stop commands, refer to *5-2 IO-Link Communication Index List, Index 2 (System Command)* in the *S8NR-S Users Manual* (Man. No. T245)
Red ON	Internal fault	An internal failure may have occurred in the product. Restart the product. If the error reoccurs, replace the product.
Green flashing	Communication established	IO-Link communication is established.
OFF	Communication not established	No IO-Link communication.

IO-Link Communication Index List

Refer to the *S8NR-S Users Manual* (Man. No. T245) for IO-Link communication Index list.

Connection

Block Diagrams

S8NR-S09024-A1L0

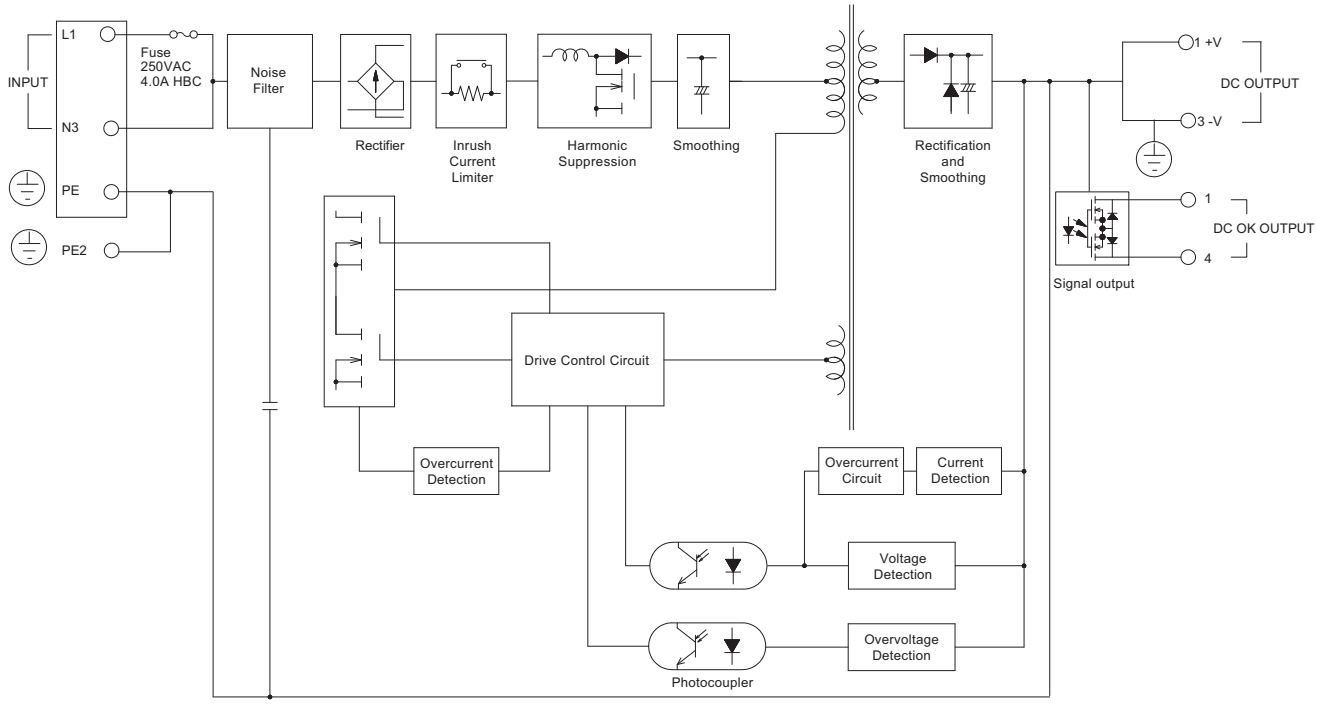

S8NR-S36024-A0L2-IL3

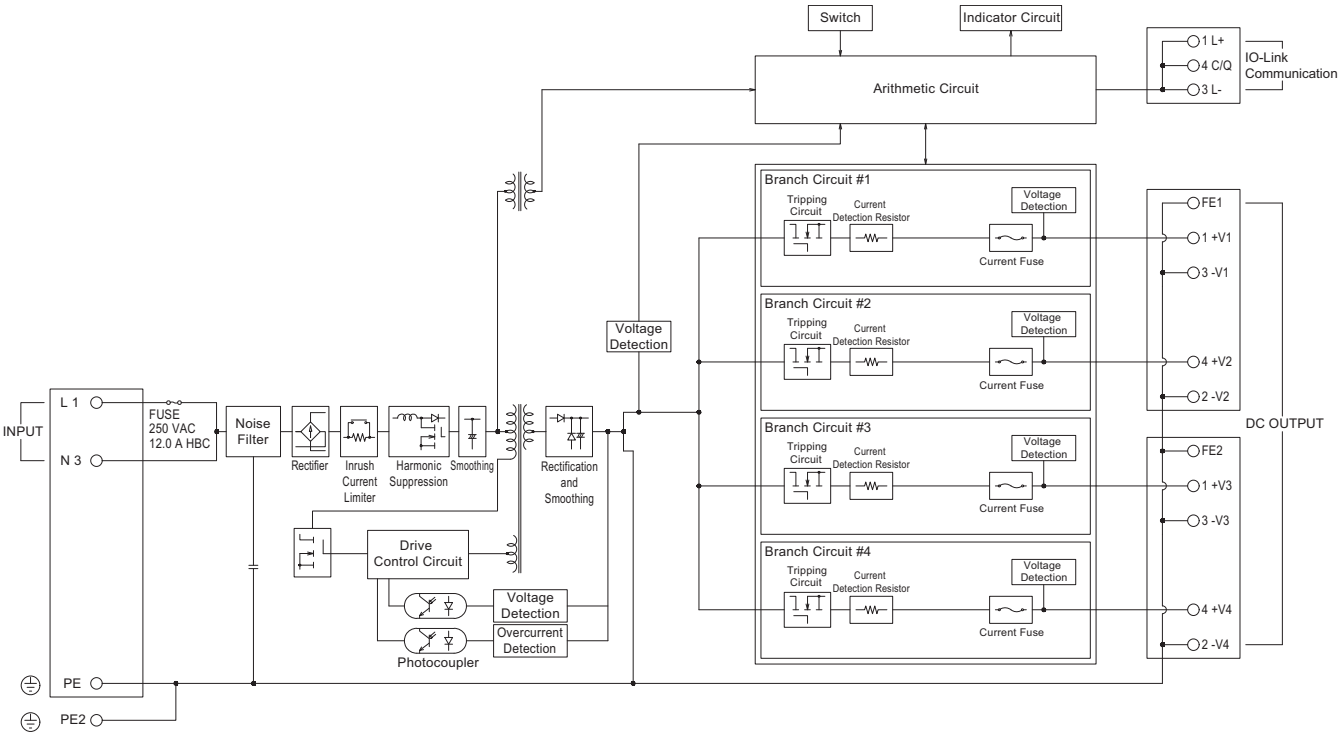

S8NR-S36024-A2L1-IL3

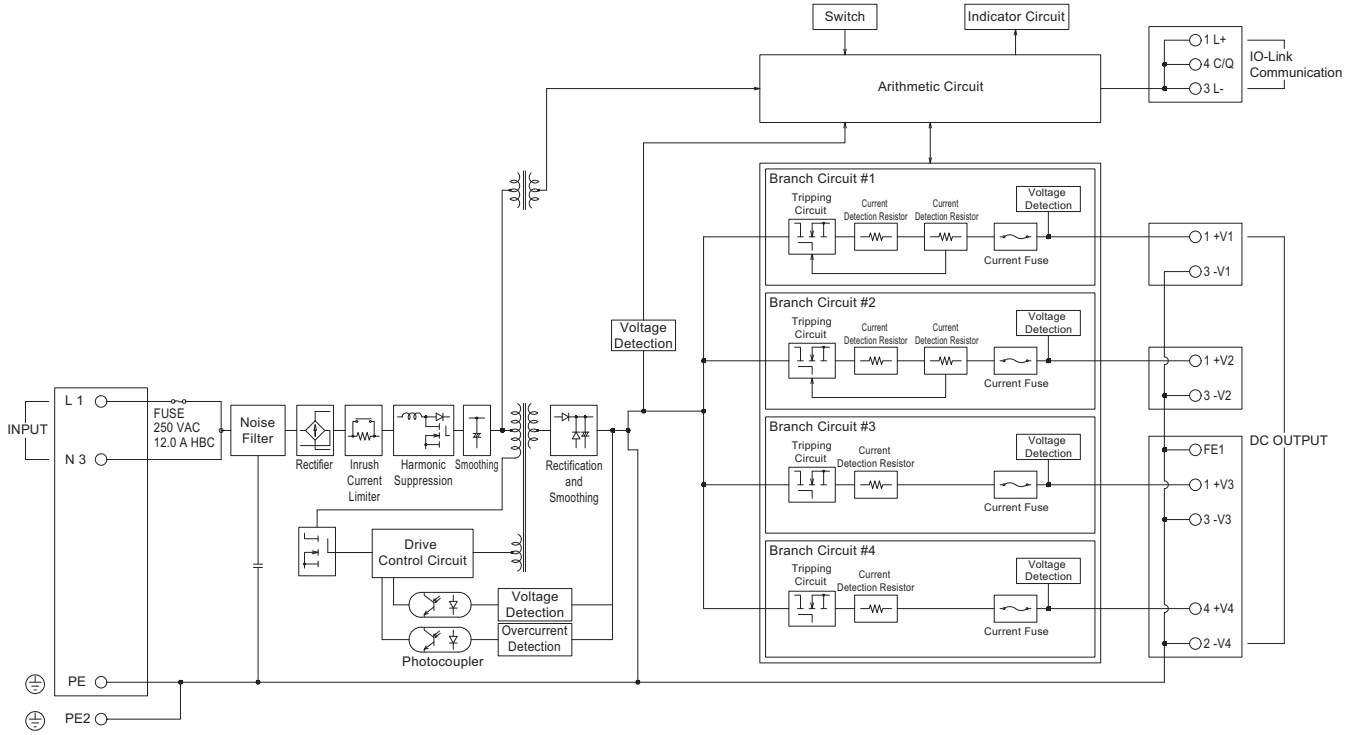

S8NR-S60024-A0L3-IL3

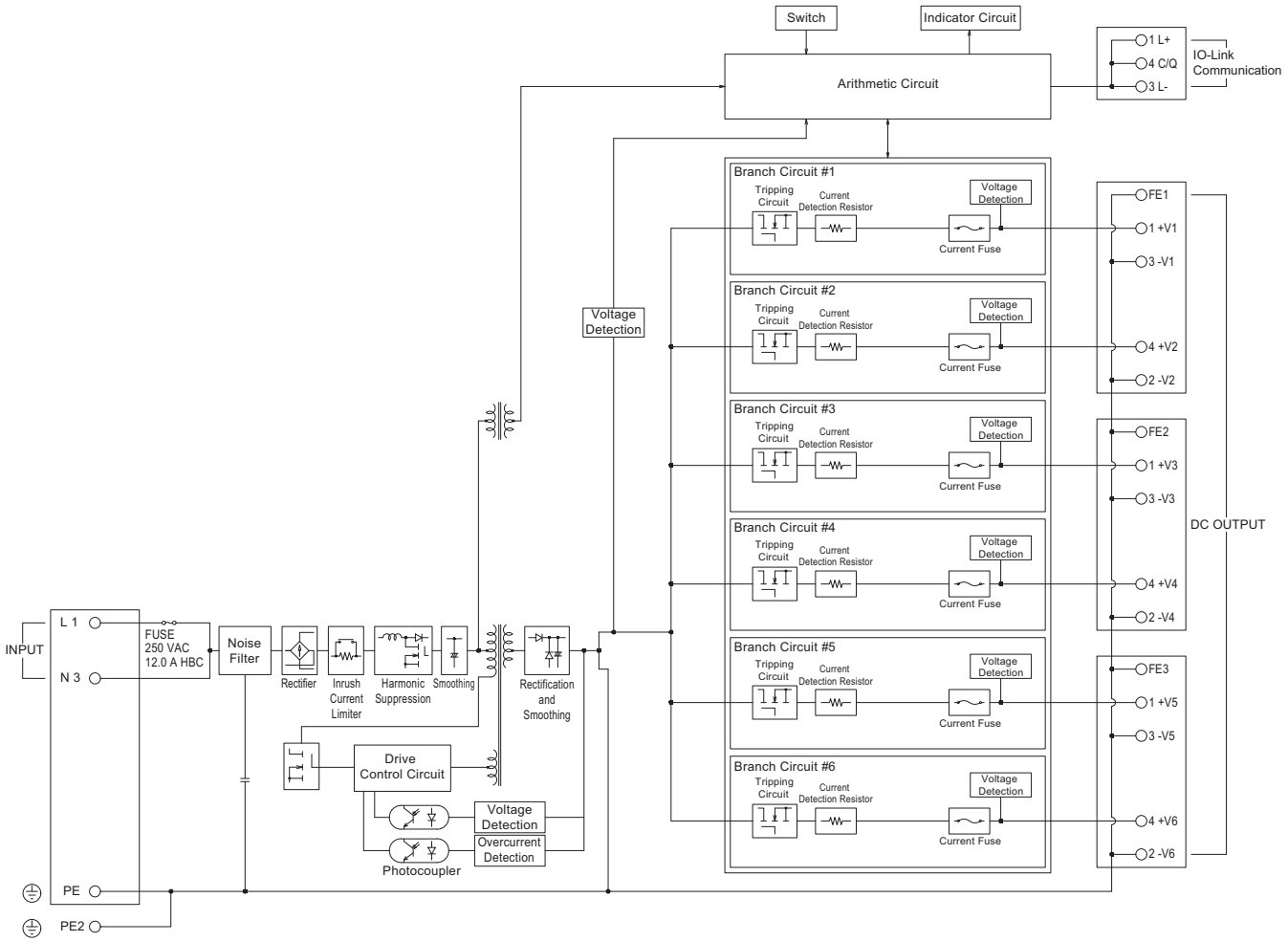

S8NR-S60024-A2L2-IL3

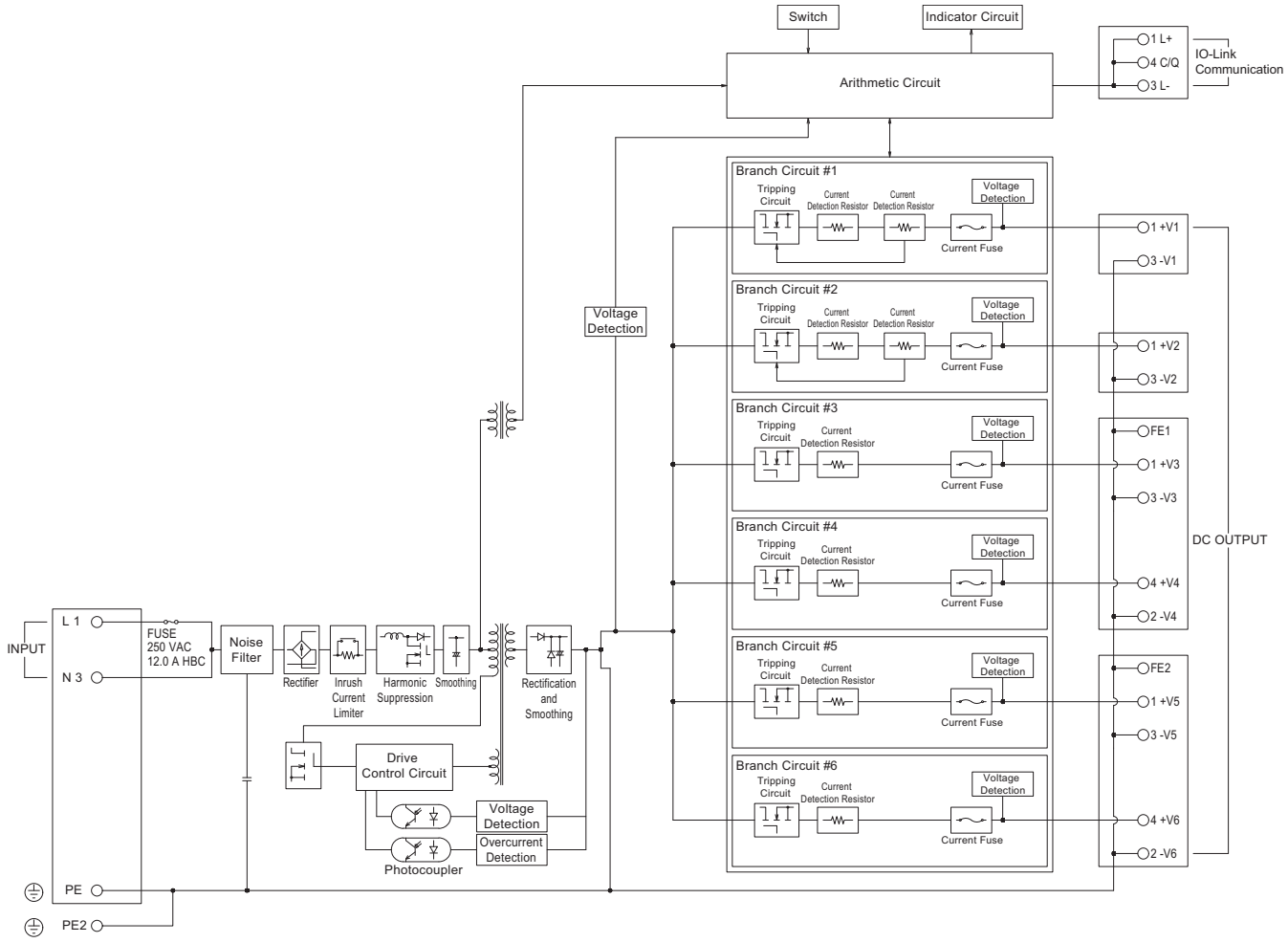

Constructions and Nomenclature

Nomenclature

S8NR-S09024-A1L0

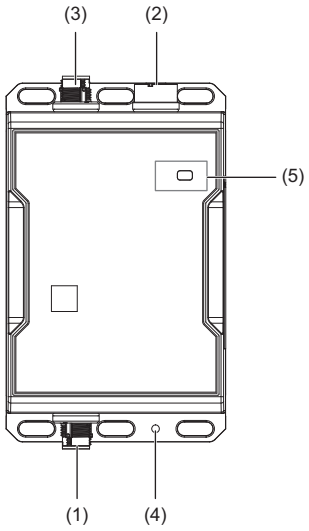

No.	Connector Name	Shape	Pin Assignment
(1)	Input Terminal M12-S (Plug)		PE: PE (Protective Earth) Terminal ✻1 ⏚
			1: Input Terminal (L)
			3: Input Terminal (N)
(2)	Output Terminals M12-A (Socket)	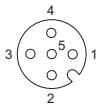	1: Output Terminal (+) (Class 2 Output)
			2: NC
			3: Output Terminal (-) (Class 2 Output)
			4: NC
			5: NC
(3)	Signal Terminal M12-A (Plug)	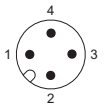	1: Signal Output (DC OK1) Non-polarized
			2: No Pin
			3: No Pin
			4: Signal Output (DC OK2) Non-polarized
(4)	PE Terminal (⏚)		Recommended screws: M4 Recommended tightening torque: 0.7 N·m Recommended wire: AWG14
(5)	Output Indicator (DC OK (Green))		Indicates whether output voltage is supplied.

✻1. As this is a PE (Protective Earth) terminal specified by safety standards, ensure it is connected to ground.

S8NR-S36024-A□L□-IL3
S8NR-S60024-A□L□-IL3

The following explanation uses the connector layout of S8NR-S60024-A2L2-IL3 as a representative example.
Refer to the user manual for details.

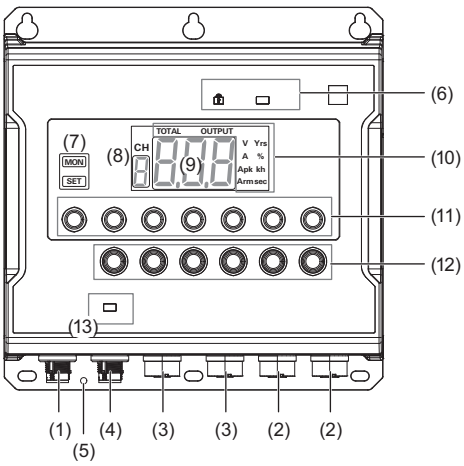

No.	Connector Name	Shape	Pin Assignment
(1)	Input Terminal M12-S (Plug)		PE: PE (Protective Earth) Terminal ✻1 ⏚
			1: Input Terminal (L)
			3: Input Terminal (N)
(2)	Output Terminals M12-L (Socket)	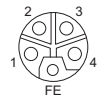	FE: FE (Functional Earth) Terminal ⏚
			1: Branch Output Terminal (+) (1/2)
			2: Branch Output Terminal (-) (2/2)
			3: Branch Output Terminal (-) (1/2)
			4: Branch Output Terminal (+) (2/2)
(3)	Output Terminals M12-A (Socket)	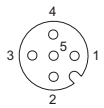	1: Branch Output Terminal (+) (Class 2 Output)
			2: NC
			3: Branch Output Terminal (-) (Class 2 Output)
			4: NC
			5: NC
(4)	IO-Link Communication Terminal M12-A (Plug)	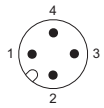	1: L+
			2: No Pin
			3: L-
			4: C/Q
(5)	PE Terminal		Recommended screws: M4 Recommended tightening torque: 0.7 N·m Recommended wire: AWG14
(6)	Key Lock Indicator 🔒		Lights when key lock is active.
	Output Indicator (DC OK (Green))		Indicates whether output voltage is supplied.
(7)	Mode Display (MON/SET)		Displays the current mode (Monitor Mode/Setting Mode).
(8)	Branch Output Number Indicator (Green)		Displays the currently selected branch output channel.
(9)	Eleven-segment Display (White)		Displays measured or set values.
(10)	Unit Indicator (Orange)		Lights when the displayed value on the Eleven-segment Display relates to units (TOTAL, OUTPUT, V, A, Apk, Arm, Yrs, %, kh, sec).
(11)	Mode Switch Key (MON/SET)		Switches between Monitor Mode and Setting Mode.
	Channel Down Key ⌄		Used to switch branch outputs.
	Channel Up Key ⌃		
	Select Down Key ⌄⌄		Used to scroll forward through display items or decrease a set value.
	Select Up Key ⌃⌃		Used to scroll backward through display items or increase a set value.
	Enter Key ↵		Switches between display items and confirms or executes settings.
	Reset (RST)/ Cancel (ESC) Key (RST/ESC)		Switches between display items and cancels operations. It also releases abnormal conditions when abnormal shutdown operations or alarm outputs are active.
(12)	Channel ON/OFF Key (Red/ Green)		Indicator shows connection/tripping status for each branch output: Red=Tripped, Green=Connected. ✻2 The push button toggles connection/tripping for each branch output. For 360 W models, channels are limited to CH1 to CH4.
(13)	IO-Link Indicator (Red/Green)		In case of a product fault, the indicator lights solid red. Under normal conditions, the indicator is off when communication is not established, and blinks green once communication is established.

✻**1.** As this is a PE (Protective Earth) terminal specified by safety standards, ensure it is connected to ground.
✻**2.** For details on the display method, refer to *Operation display and how to operate the Channel ON/OFF key* on page 35.

Channel Assignment for Output Terminal Connectors

S8NR-S09024-A1L0

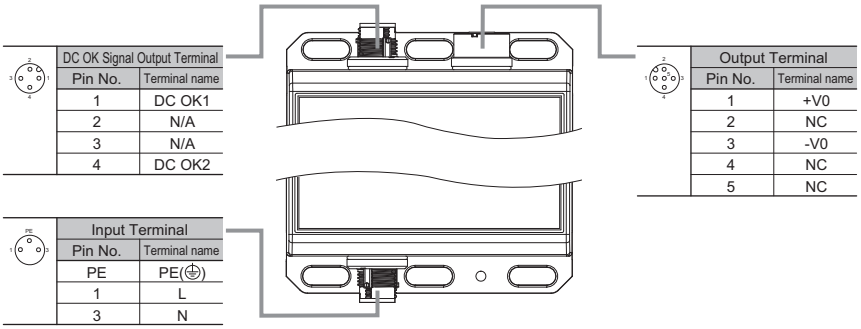

DC OK Signal Output Terminal	
Pin No.	Terminal name
1	DC OK1
2	N/A
3	N/A
4	DC OK2

Input Terminal	
Pin No.	Terminal name
PE	PE(⏚)
1	L
3	N

Output Terminal	
Pin No.	Terminal name
1	+V0
2	NC
3	-V0
4	NC
5	NC

S8NR-S36024-A2L1-IL3

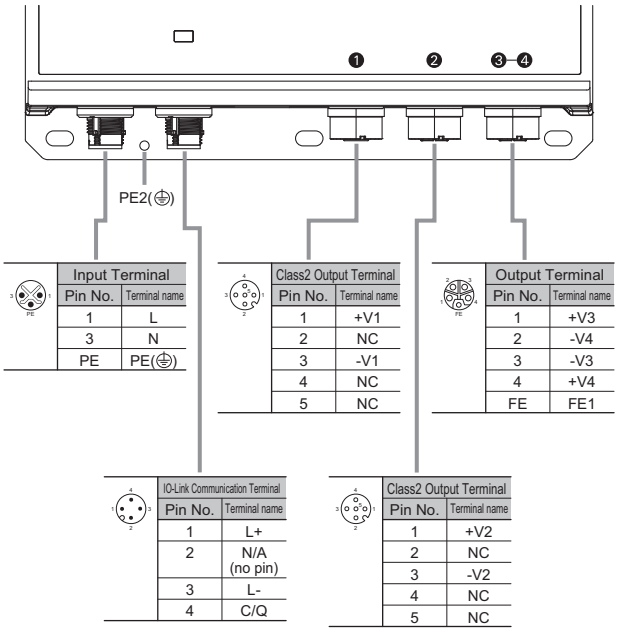

Input Terminal	
Pin No.	Terminal name
1	L
3	N
PE	PE(⏚)

Class2 Output Terminal	
Pin No.	Terminal name
1	+V1
2	NC
3	-V1
4	NC
5	NC

Output Terminal	
Pin No.	Terminal name
1	+V3
2	-V4
3	-V3
4	+V4
FE	FE1

IO-Link Communication Terminal	
Pin No.	Terminal name
1	L+
2	N/A (no pin)
3	L-
4	C/Q

Class2 Output Terminal	
Pin No.	Terminal name
1	+V2
2	NC
3	-V2
4	NC
5	NC

S8NR-S60024-A2L2-IL3

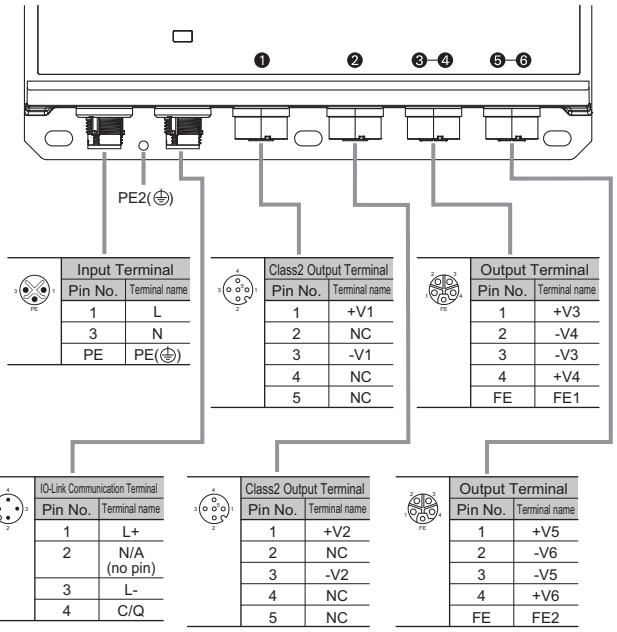

Input Terminal	
Pin No.	Terminal name
1	L
3	N
PE	PE(⏚)

Class2 Output Terminal	
Pin No.	Terminal name
1	+V1
2	NC
3	-V1
4	NC
5	NC

Output Terminal	
Pin No.	Terminal name
1	+V3
2	-V4
3	-V3
4	+V4
FE	FE1

IO-Link Communication Terminal	
Pin No.	Terminal name
1	L+
2	N/A (no pin)
3	L-
4	C/Q

Class2 Output Terminal	
Pin No.	Terminal name
1	+V2
2	NC
3	-V2
4	NC
5	NC

Output Terminal	
Pin No.	Terminal name
1	+V5
2	-V6
3	-V5
4	+V6
FE	FE2

S8NR-S36024-A0L2-IL3

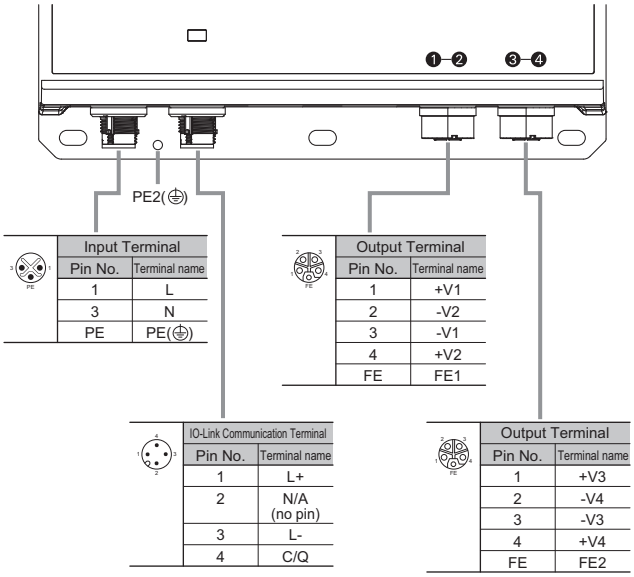

Input Terminal	
Pin No.	Terminal name
1	L
3	N
PE	PE(⏚)

Output Terminal	
Pin No.	Terminal name
1	+V1
2	-V2
3	-V1
4	+V2
FE	FE1

IO-Link Communication Terminal	
Pin No.	Terminal name
1	L+
2	N/A (no pin)
3	L-
4	C/Q

Output Terminal	
Pin No.	Terminal name
1	+V3
2	-V4
3	-V3
4	+V4
FE	FE2

S8NR-S60024-A0L3-IL3

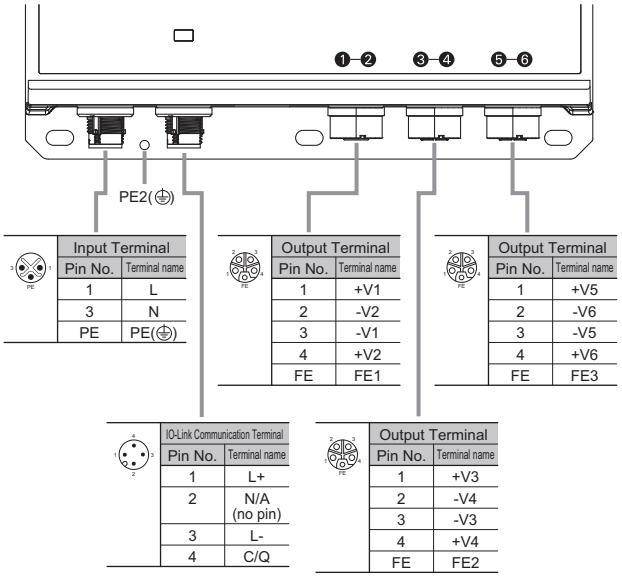

Input Terminal	
Pin No.	Terminal name
1	L
3	N
PE	PE(⏚)

Output Terminal	
Pin No.	Terminal name
1	+V1
2	-V2
3	-V1
4	+V2
FE	FE1

Output Terminal	
Pin No.	Terminal name
1	+V5
2	-V6
3	-V5
4	+V6
FE	FE3

IO-Link Communication Terminal	
Pin No.	Terminal name
1	L+
2	N/A (no pin)
3	L-
4	C/Q

Output Terminal	
Pin No.	Terminal name
1	+V3
2	-V4
3	-V3
4	+V4
FE	FE2

Characteristic Data

Derating curve

The allowable ambient temperature of the S8NR-S is determined by the rated output current (90 W) or the maximum total output current under normal operating conditions (360 W and 600 W), as indicated by the derating curve.
At least 15 mm spacing between left and right during standard installation

S8NR-S09024-A1L0

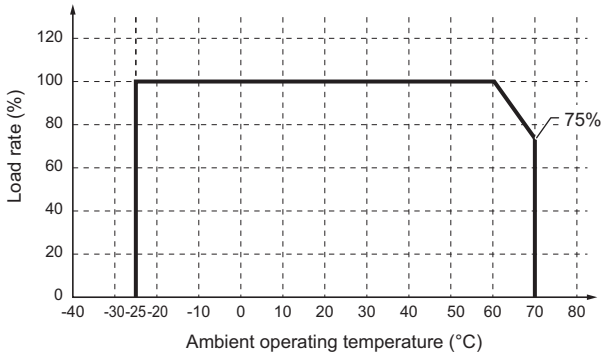

S8NR-S36024-A□L□-IL3
S8NR-S60024-A□L□-IL3

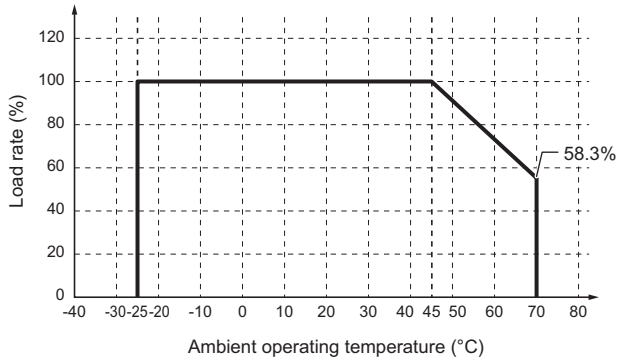

Note: 1. Please multiply the Load factor indicated by the above Outputs derating by the Load reduction coefficient relative to the input voltage and use the resulting value.

Load reduction factor for input voltage

S8NR-S09024-A1L0, S8NR-S36024-A□L□-IL3

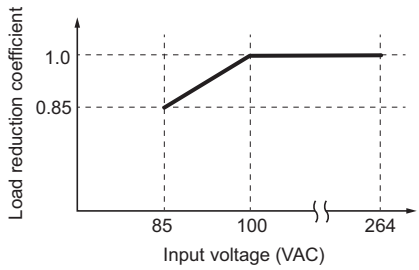

S8NR-S60024-A□L□-IL3

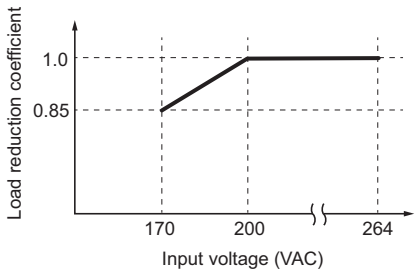

This Power Supply can be used at an altitude of 3,000 m. Between 2,000 and 3,000 m, derate the load according to the following derating curve.
Horizontal separation: 15 mm or more

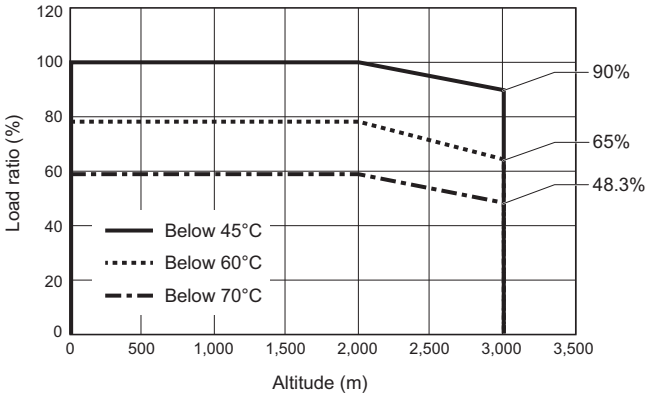

Note: 1. Please multiply the Load factor indicated by the above Outputs derating by the Load reduction coefficient relative to the input voltage and use the resulting value.

Load reduction factor for input voltage

S8NR-S09024-A1L0, S8NR-S36024-A□L□-IL3

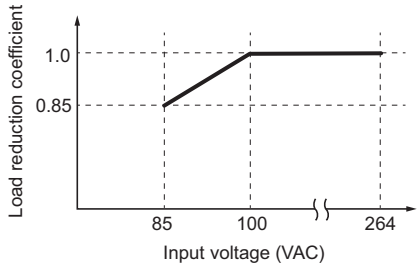

S8NR-S60024-A□L□-IL3

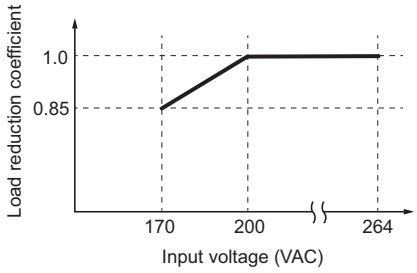

Functions <S8NR-S09024-A1L0>

DC OK Signal Output Function

When the output voltage is 90% or more of the rated output voltage, the internal MOS FET relay turns ON (conducts).

Note: 1. The DC OK signal output function monitors the voltage at the product's output terminals.
To check the exact voltage applied to the load, measure the voltage at the load terminals.

Specifications

The signal output consists of a MOSFET relay. Polarity is not required.
30 VDC max.
50 mA max.
Residual voltage when ON: 2 V max
Leakage current when OFF: 0.1 mA max

Note: 2. Internal current control circuits are not provided internally for output signals. Do not allow the output current to exceed 50 mA.
Note: 3. After completing wiring, confirm that the circuits operate correctly.

Functions <S8NR-S36024-A□L□-IL3, S8NR-S60024-A□L□-IL3>

Abnormal Current Tripping Characteristics Functions

The current tripping characteristics can be selected from three types of Tripping type: Standard Detection, Instantaneous Detection, and Extended Detection. For details, please refer to the *Form S8NR-S Users Manual* (Man. No. T245).

Note: 1. In the event of an abnormal tripping, be sure to reset and restore the system only after the cause has been eliminated.
Note: 2. When using loads that operate with constant power, tripping may occur when the power is turned off.
Note: 3. The current tripping accuracy is within ±0.3 A of the Set value.

Current limiting by internal circuits

S8NR-S has a current Restrictions circuit inside to prevent a current exceeding a certain level from flowing. Until the tripping time is reached, the current is Restrictions by this characteristic.

Short-circuit Protection Fuse

If, due to some abnormality, the branch output cannot be tripping off by the tripping circuit, the short-circuit protection fuse will blow to protect the circuit.

Note: If the fuse blows, that branch output cannot be used.

Standard Detection (M12-A)

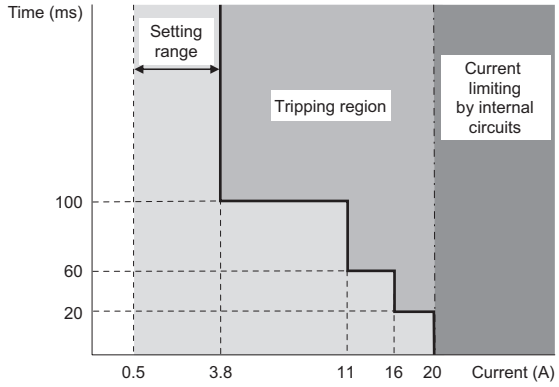

3.8 A Class2 Output

Standard Detection (M12-L)

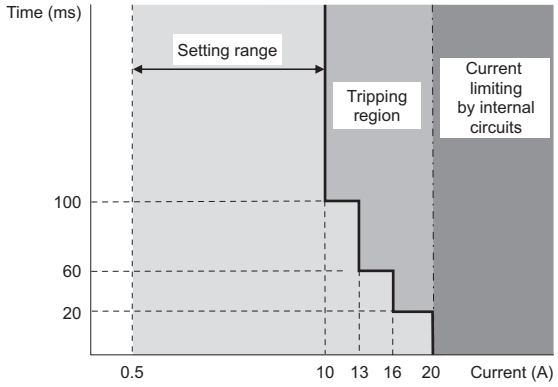

10 A

Extended Detection (M12-A)

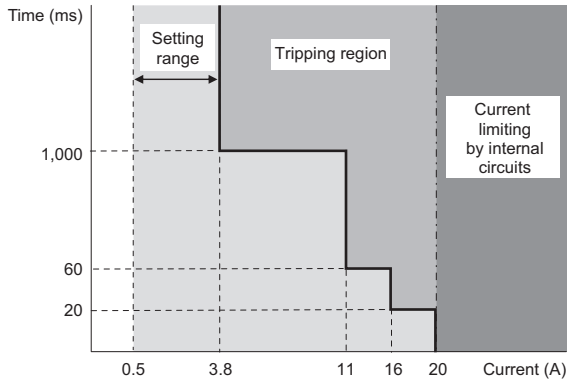

3.8 A Class2 Output

Extended Detection (M12-L)

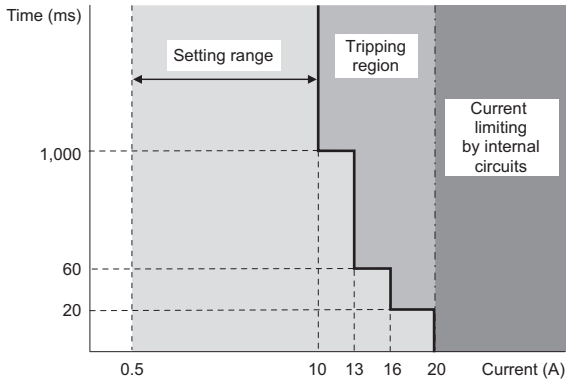

10 A

Instantaneous Detection (M12-A)

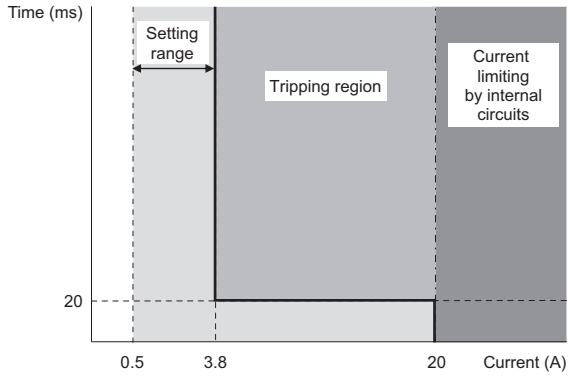

3.8 A Class2 Output

Instantaneous Detection (M12-L)

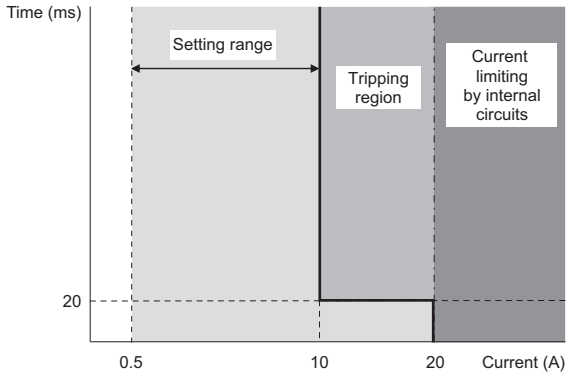

10 A

Tripping Functions

Settings	Operating range	Parameters settings	Outputs cutoff
Abnormal Voltage Tripping	Tripping when the output voltage exceeds the abnormal voltage tripping setting.	Yes	All branch outputs
Short-circuit current tripping	The cutoff current varies depending on the output connector. M12-A: Cutoff at 16 A within 20 ms, and at 11 A within 60 ms. M12-L: Cutoff at 16 A within 20 ms, and at 13 A within 60 ms.	None	Individual branch output
Abnormal total current tripping	Tripping occurs when the sum of all branch output currents exceeds at a constant current value for a certain period of time.	None	All branch outputs
Abnormal current tripping ✻1	The setting range varies depending on the output connector. M12-A: 0.5 to 3.8 A (in 0.1-A increments) M12-L: 0.5 to 10.0 A (in 0.1-A increments) Select from standard, instantaneous, and extended detection methods.	Yes	Individual branch output
Cutoff by IO-Link external signal input	Refer to *Index 124: External tripping input cutoff for branch* or *Index 125: External tripping input* in the *S8NR-S Users Manual* (Man. No. T245)	Yes	Specified output ✻2

✻1. The tripping function operates within 100 ms when the S8NR-S is set to standard detection, within 20 ms when it is set to instantaneous detection, and within 1,000 ms when it is set to extended detection.
✻2. Only branch outputs with Tripping Operation via External Tripping Input set to “Enabled” are affected.
(Refer to *2-7 External Signal Tripping Input function* in the *S8NR-S Users Manual* (Man. No. T245))

Voltage Adjustment Function

The output voltage can be adjusted by key operation or via communication. The adjustable range is from 24.0 V to 28.0 V.

Adjustment by Key Operation

1. Press the Mode Select key to enter the setting mode. SET is in the setting mode when the indicator is lit.

2. The output voltage value is displayed. 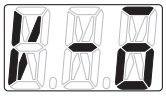

3. Press the Enter key ⏎ .

4. Use the Select Up key ⌃ or Select Down key ⌄ to adjust to the desired voltage.

Adjustment via Communication

For adjustment via communication, refer to *S8NR-S User’s Manual* (Man. No. T245).

Remaining Current Value Function

The Remaining Current Value function displays how much current can still be supplied for each branch output. This function allows users to monitor the remaining current of each branch output and perform appropriate current management, helping to prevent overloads and abnormal currents and ensuring safe operation.
For details, refer to *S8NR-S User’s Manual* (Man. No. T245).

Stress Level Function

This function indicates how much of the total capacity is currently being used.
For details, refer to *S8NR-S User’s Manual* (Man. No. T245).

Standby Function

Based on commands received via communication, this function controls enabling and disabling of the 24 V output.
Settings can be configured only via IO-Link.
For details, refer to *S8NR-S User’s Manual* (Man. No. T245).

Maintenance Forecast Monitor Function

This product has a built-in electrolytic capacitor. Electrolytic capacitors undergo degradation in characteristics, such as a decrease in capacitance, over time due to the evaporation of the internal electrolyte solution. This degradation begins at the time of manufacture as the impregnated electrolyte solution permeates the sealing rubber. Due to degradation of this electrolytic capacitor's characteristics, this product will become unable to perform sufficiently over time. The maintenance forecast monitor function calculates an estimated period until this product will no longer be able to perform sufficiently due to degradation of the electrolytic capacitor's characteristics. This feature can be used as a guideline for finding out when to replace the product main unit.

Note: The maintenance forecast monitor function indicates an estimated period until the product will no longer be able to perform sufficiently due to degradation of the electrolytic capacitor. This function does not cover failures caused by other factors.

Principle of Operation

The degradation rate of an electrolytic capacitor varies considerably with ambient temperature (generally following the doubling for every 10°C rule and the Arrhenius equation).

The S8NR-S monitors the internal temperature of the product while powered ON, and calculates the degradation level of the electrolytic capacitor based on running time and internal temperature.

Note: 1. Depending on the durability of the electronic components, we recommend replacing the electrolytic capacitors approximately 15 years after purchase, regardless of the maintenance forecast monitor number of years or percentage displayed.

Note: 2. The replacement time varies depending on changes in operating conditions. Check the display periodically.

Note: 3. In applications where the input power is frequently turned ON and OFF, the accuracy of the maintenance forecast monitor function may deteriorate.

Years up to replacement time

FUL is indicated at the time of purchase (when initially powered on), and continues to be indicated for approximately one month. Afterward, the state of deterioration for the electrolytic capacitor is calculated based on the usage environment and HLF is indicated when deterioration progresses. When the years until replacement reaches 5 years or less, it is indicated in 0.1 step increments within the range of 4.9 to 0.0. (Depending on the usage environment, the number of years may be indicated after FUL without HLF being indicated.)

Note: The number of years until replacement may vary if there are frequent load variations or in locations where the ambient temperature fluctuates drastically.

Percentage up to replacement time

With the number of years until replacement at the time of manufacture set as 100%, as deterioration of the electrolytic capacitor progresses through use, it decreases in 0.1% step increments.

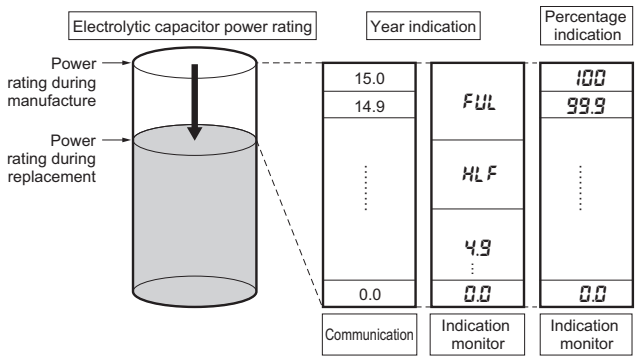

Relationship between electrolytic capacitor power rating and indicator

Total running time

The accumulated value of the product's time powered on is measured as the total run time.

The Total run time increases in 1 (kh) steps.

Time Chart

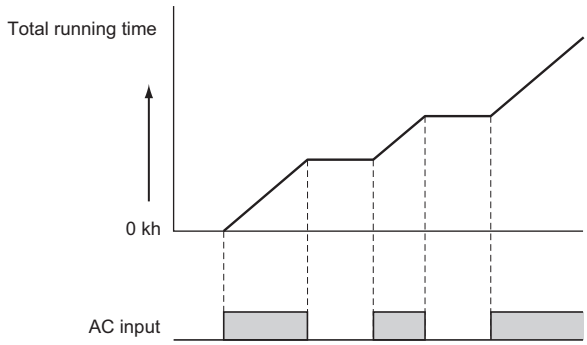

Note: 1. The total run time does not include the time that the Power Supply is OFF.

Note: 2. The total run time measures the total time that power is being supplied and is not related in any way to deterioration in the electrolytic capacitor built into the Power Supply or to the effects of the ambient temperature.

Maintenance Forecast Monitor Output (A23) Displayed

When error code A23 (maintenance forecast monitor output) is displayed on the eleven-segment display, it indicates that the replacement time calculated by the S8NR-S has fallen below the set value. The number of years left before replacement is required will be displayed in half-year increments. Prepare to replace the Power Supply.

Pre-warning Function

When the current of each branch output or the total current exceeds the set value of the PSU current pre-warning level, warning information is issued. Settings and notifications can be configured only via communication (IO-Link).

For details, refer to *S8NR-S User's Manual* (Man. No. T245).

Startup Sequence Function

The inrush current may cause a voltage drop if all of the branch outputs are connected simultaneously and there is little spare capacity in the power supply or the loads connected to the branch outputs are capacitive loads. A significant voltage drop may cause an output to be cut off. In this case, a time delay can be applied between the connections of the branch outputs to minimize the voltage drop.

Note: 1. The time delay can be set between 0.0 and 99.9 s. (If the delay is set to 0.0 s, the startup sequence will not operate and the branch output will be connected immediately.)

Note: 2. The sequence Functions is only guaranteed between individual Branch output. When using multiple S8NR-S units, time synchronization between each S8NR-S unit cannot be maintained.

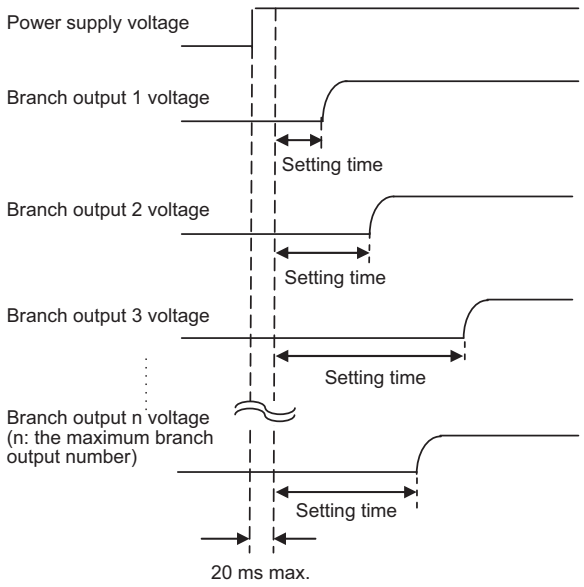

- The branch output's status indicator will flash green during the startup sequence time until it is connected.
- For details on verification of the startup sequence, refer to the *S8NR-S User's Manual* (Man. No. T245).
- The default values of the startup sequence for each branch output are set as follows.

Branch Output No.	1	2	3	4	5	6
Setting time (360 W)	0.0 s	0.4 s	0.8 s	1.2 s	---	---
Setting time (600 W)	0.0 s	0.4 s	0.8 s	1.2 s	1.6 s	2.0 s

Shutdown Sequence Function

When the S8NR-S's input power supply is turned OFF, all of the branch outputs are turned OFF (disconnected) simultaneously. On the other hand, when the branch outputs are cut off by the external tripping input or communications, a time delay can be applied between the branch output disconnections.

Note: 1. The time delay can be set between 0.0 and 99.9 s. (If the delay is set to 0.0 s, the startup sequence will not operate and the branch output will be cut off immediately.)

Note: 2. The sequence functions is only guaranteed between individual Branch output. When using multiple units of the S8NR-S model, time synchronization between each S8NR-S model cannot be achieved.

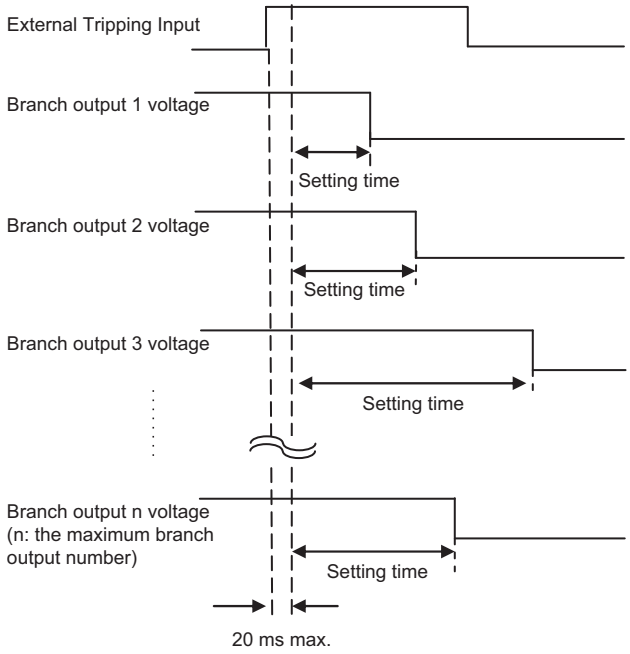

Note: 3. When operation is cut off due to an abnormal voltage, all of the branch outputs will be cut off simultaneously.

Note: 4. The shutdown sequence function will operate on a branch output only if the external tripping input is enabled for that branch output. For details, refer to the *S8NR-S User's Manual* (Man. No. T245).

- For details on verification of the shutdown sequence, refer to the *S8NR-S User's Manual* (Man. No. T245).

Monitoring Functions

Parameter name	Details	Display	Communication
Output voltage (Index 79: Present Voltage Value)	Displays the output voltage.	Yes	Yes
Output current (Index 84: Output Current)	Displays the current value of each branch output.	Yes	Yes
Total current (Index 81: Total Current)	Displays the total current value of all the branch outputs.	Yes	Yes
Peak current (Index 89: Peak Current Value)	Displays individual branch output peak currents.	Yes	Yes
Remaining Current Value (Index 90: Remaining Current Value)	Displays how much additional current can be supplied for each branch output.	Yes	Yes
Years up to replacement time (Index 67: Remaining Current Value)	Displays the remaining number of years up to the replacement time by forecasting the replacement time of the S8NR-S.	Yes	Yes
Percentage up to replacement time (Index 68: Percentage up to replacement time)	Displays the remaining number of percentage up to the replacement time by forecasting the replacement time of the S8NR-S.	Yes	Yes
Total running time (Index 73: Total running time)	Displays the total operating time of the S8NR-S unit.	Yes	Yes
Temperature (Index 69: Internal Temperature)	Displays the internal temperature of the S8NR-S.	None	Yes

Setting Functions

Parameter Name	Description	Display	Communication
Output Voltage Setting (Index 105:Output Voltage Setting Value)	Allows adjustment of the output voltage. The adjustable range is from 24.0 to 28.0 V.	Yes	Yes
Abnormal Current Tripping Threshold (Index 108: Abnoraml Current Tripping Threshold)	Allows setting of the tripping current value for each branch output. The setting resolution is 0.1 A.	Yes	Yes
Abnormal Current Tripping Detection Type (Index 107: Abnormal Current Tripping Detection Type)	Allows selection of the shutdown detection method for each branch output. USU: Standard (tripping within 100 ms) INS: Instantaneous (tripping within 20 ms) LNG: Long-time (tripping within 1,000 ms)	Yes	Yes
Abnormal Voltage Tripping Threshold (Index 112: Abnormal Voltage tripping Threshold)	Allows setting of the abnormal voltage tripping threshold for the output voltage.	Yes	Yes
Undervoltage Alarm Threshold (Index 114: Undervoltage Alarm Threshold)	Detects a drop in output voltage and displays an undervoltage alarm (A2 1). The event is also output via IO-Link communication. Setting resolution is 0.1 V. Branch outputs are not shut down.	Yes	Yes
Years-to-Replacement Alarm Threshold (Index 116: Years-to-Replacement Alarm Threshold)	Sets the planned replacement years for the S8NR-S unit. When the value falls below the threshold, the “Yrs” indicator lights once. The event is also output via IO-Link communication.	Yes	Yes
Replacement Ratio Alarm Threshold (Index 117: Replacement Ratio Alarm Threshold)	Sets the planned replacement ratio for the S8NR-S unit. When the value falls below the threshold, the “%” indicator lights once. The event is also output via IO-Link communication.	Yes	Yes
Operating Time Alarm Threshold (Index: 118)	Sets the operating time alarm threshold. When exceeded, the “kh” indicator lights once. The event is also output via IO-Link communication.	Yes	Yes
Temperature Alarm Threshold (Index 115: Temperature Alarm Threshold)	Allows setting of a temperature alarm by detecting an increase in the internal temperature of the S8NR-S unit.	None	Yes
Startup Sequence (Index 110: Startup Sequence)	Allows a time delay to be set for each branch output when connection starts at power ON. This enables sequence operation and disperses inrush current, reducing the load on the power supply.	Yes	Yes
Shutdown Sequence (Index: 111)	Allows a time delay to be set when shutting down branch outputs via an external signal tripping input from communication.	Yes	Yes
Shutdown Trigger Enable/Disable (Index 125: External)	Allows enabling (ON) or disabling (OFF) the external shutdown signal input via communication for each branch output.	None	Yes
Shutdown Trigger Input Type (Index: 123)	Allows setting the type of shutdown trigger input commonly used for branch outputs where the shutdown trigger input is enabled.	None	Yes

Parameter Name	Description	Display	Communication
Reset Function Setting (Index 119: Alarm Reset Setting)	Selects the reset operation method to recover from an abnormal tripping or alarm state after the cause has been removed. • KEY: Only the RST key is enabled. • ALL: Operating the RST key or power is turned on again.	Yes	Yes
Protect Level (Index 102: Protect Level)	Restricts reading/writing of setting data and monitor operations in four levels. The factory default is Level 1.	Yes	Yes
Channel ON/OFF Key Enable/Disable (Index 103: CH Key)	Allows connection/disconnection switching via the Channel ON/OFF key. This function can be disabled to prevent incorrect operation. The default setting is Enabled.	Yes	Yes
Initialize Settings (Index 2: System Command)	Used to restore all settings to their default values.	Yes	Yes

For details, refer to *4-3 Parameter Settings in Setting Mode* in the *S8NR-S Users Manual* (Man. No. T245).

Monitor Mode and Setting Mode of the S8NR-S

At shipment, all branch outputs are connected (ON), and the unit starts in Monitor Mode.
To disconnect unused branch outputs, use the Channel ON/OFF key.
Various parameters can be changed in Setting Mode.

Displaying Alarms

The S8NR-S displays alarms according to the parameters set in Setting Mode.
The alarm number and detected value are alternated on the display for each item.

Error code	Error	Output status
A10	Abnormal Voltage Tripping	Cut off All branch outputs
A11	Abnormal current tripping	Cut off the Target Outputs
A12	Total output current tripping	Cut off all branch outputs
A21	Undervoltage detection	No cutoff operation
A23	Replacement time notification	No cutoff operation
A23/HOT	Overheating alarm	No cutoff operation
A30	Over-temperature output	No cutoff operation

Resetting Alarms

When an alarm is displayed, remove the cause of the alarm and then press the RST/ESC Key. When it is possible to clear the error, press the RST/ESC Key for 3 seconds. RST will be shown on the 11-segment display. Resetting will be possible.

Note: 1. Although errors are normally cleared when the power supply is turned ON, the setting of a parameter can be changed so that errors are not cleared.

Note: 2. The over-temperature output will automatically be reset when the temperature drops below the set value.

Operation display and how to operate the Channel ON/OFF key

The output status of branch outputs is displayed using LED illumination.
Refer to the *S8NR-S User's Manual* (Man. No. T245) for the procedure to recover from an abnormal condition.

Lights in green	Normal connected state
Flashes in green	Connection standby state by startup sequence
Lights in red	Abnormal shutdown status (waiting for recovery).
Flashes in red	Abnormal disconnection status (operation not possible)
Off	Disconnection or Operation stopped state to forced operation

Note: If the "Channel ON/OFF key" does not respond, check if the parameter "Channel ON/OFF key Enabled/Disabled" is set to "Disabled". (Default value: Enabled)

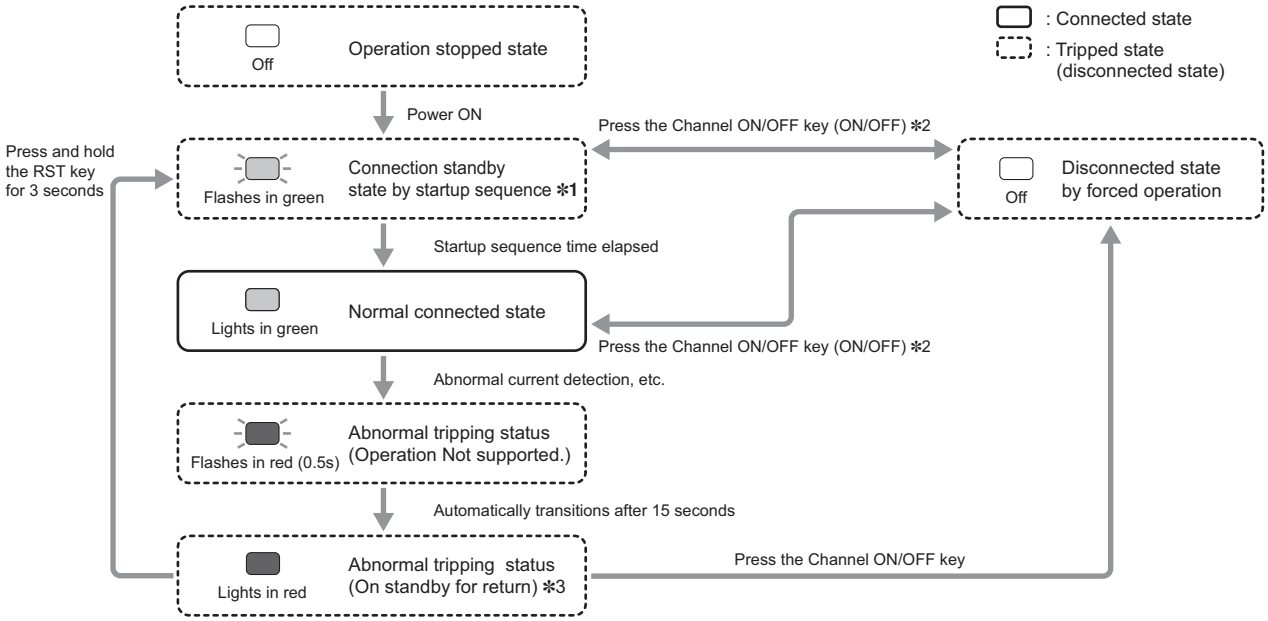

✻1. If the Startup sequence settings is 0s, it will connect normally without waiting.
✻2. If switching ON/OFF continuously, the channel will not switch from OFF to ON unless more than 3 seconds have passed since the last ON.
✻3. In the case of a tripping status due to an internal fault (waiting for recovery), it will blink Red at 0.25-second intervals.

Error Display List

Seven-segment display	Error code	Meaning	Probable cause and remedy	
ErP	ERP	Memory error on power supply side	These are S8NR-S system errors. When one of these error codes is displayed, check the system configuration and clear the error, and then turn the power supply OFF and ON again. If the error code persists, contact your OMRON representative regarding the error.	
.	---	S8NR-S hardware error		
E98	E98	RAM error		
E97	E97	EEP-ROM read error		
E96	E96	EEP-ROM write error		
E94	E94	Short circuit failure		
E00	E00	EEP-ROM initialization error		
E01	E01	EEP-ROM error		
E02	E02	Model error		
E03	E03	Factory default detection mode		
E06	E06	Product overheating abnormality	An overheating state has continued for over 180 minutes.	Internal components may have degraded, so replace the main unit.
E 10	E10	Data is corrupted.	There is an error in the parameter settings.	Press the Mode Key to switch to the parameter initialization display. After initializing the parameters, set them again.
A 10	A10	Abnormal Voltage Tripping	The power supply voltage has exceeded the abnormal voltage tripping threshold.	Check the power supply voltage.
A 11	A11	Abnormal current tripping	The current of the Branch output has reached an abnormal current cutoff judgment.	Check whether the connected device is correct and check whether the set value is appropriate.
A 12	A12	Total current tripping	All branch outputs were cutoff, since the specified total current value and its power-ON time (s) exceeded the total abnormal current tripping condition.	Check whether the connected devices are appropriate and whether they are being used within the total current value for all branch outputs that were tripped.
A21	A21	Undervoltage alarm	The output voltage dropped below the undervoltage detection threshold.	Check the power supply voltage and the set value.
A23	A23	The unit for this is displayed in 2 ways: Yrs or % is lit: Maintenance forecast monitor output kH is lit: Running time alarm	Indicates that the replacement time of this unit calculated within type S8NR-S has fallen below the set notification time.	The replacement time is approaching.
A23/Hot	A23/HOT	Overheating alarm	The S8NR-S is overheated.	Take steps to reduce the internal temperature.
A30	A30	Over-temperature output	The S8NR-S's internal temperature exceeded the over-temperature output threshold.	Check for a high ambient temperature and check the setting of the over-temperature output threshold. Take steps to reduce the temperature in the control panel.
Stb	---	Standby function active.	The output has been disabled by an operation command from IO-Link communication. Release it via IO-Link communication.	

Branch output number LED display	Error code	Meaning	Probable cause and remedy
CH	---	Measurement circuit is in a standby state.	This is displayed temporarily when the power is interrupted. There is a possibility of a malfunction if it is displayed when the power is turned on.If it is displayed continuously, perform power cycling. If the abnormality still occurred, contact your OMRON representative regarding the error.

- When multiple abnormalities occur simultaneously, they are displayed in priority order from top to bottom in the table above.
- An A11 abnormality may occur simultaneously on two or more branch outputs. In this case, the branch output number LED for the A11 abnormality that occurred later will not be displayed.

Dimensions

(Unit: mm)

Main Unit

90 W
S8NR-S09024-A1L0

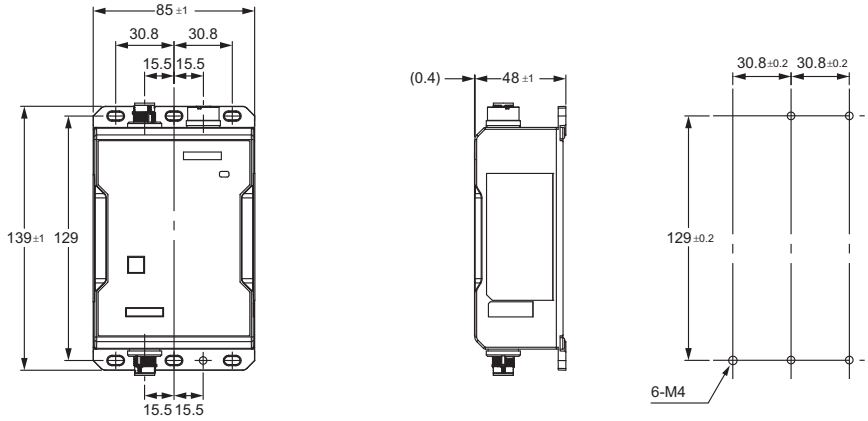

360 W/600 W
S8NR-S36024
S8NR-S60024

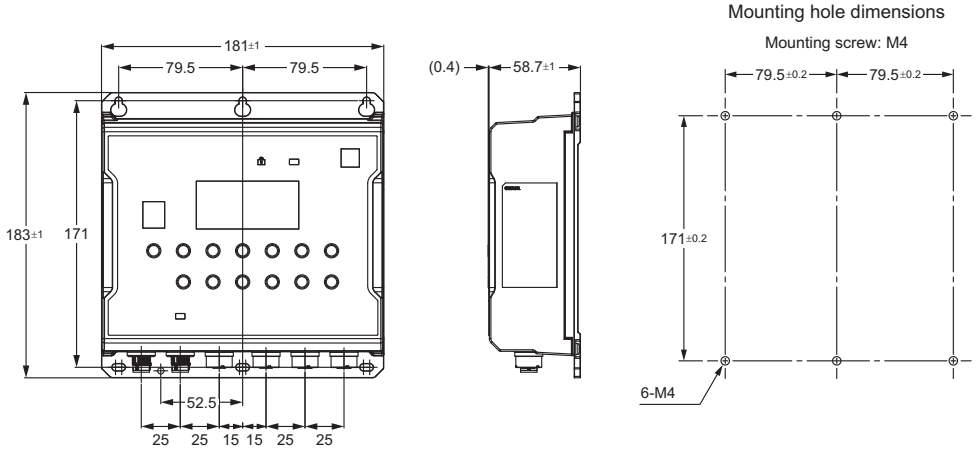

Note: S8NR-S60024-A2L2-IL3 (shown above)

Mounting Brackets

DIN Rail mounting brackets
S82Y-NRS01DIN

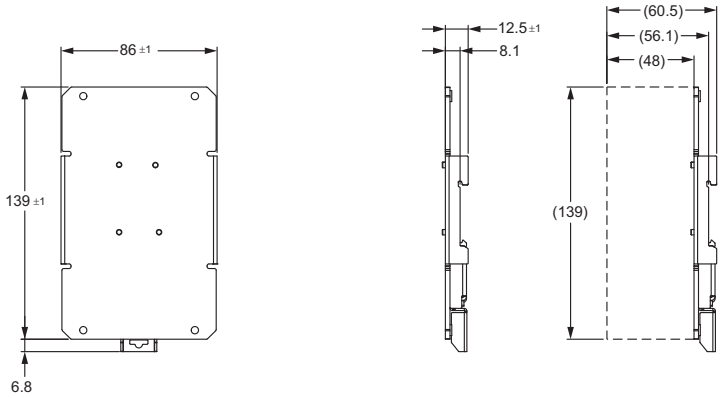

S82Y-NRS02DIN

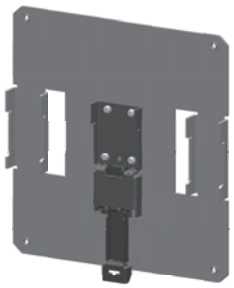

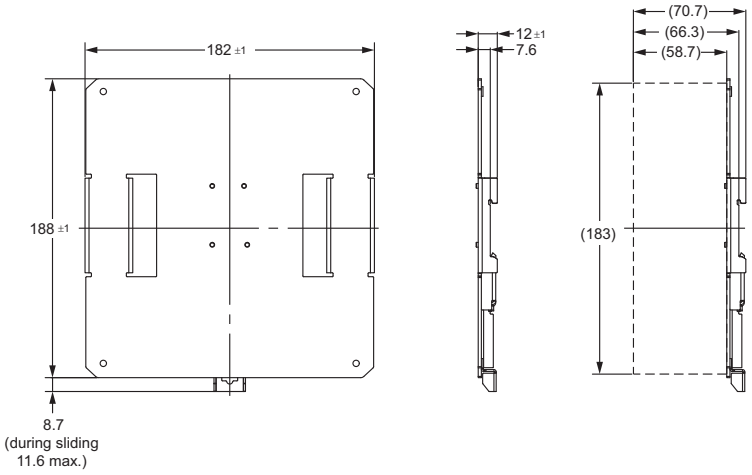

Connector cover

Waterproof caps

XS5Z-12 and XS5Z-13 have Smartclick mechanism. There's no need to keep track of locking torque.

Appearance	Model	Material	Suitable Connectors for S8NR-S	Mounting part
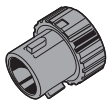	XS5Z-12	PBT	Output terminals	M12 female screw
	XS5Z-13	PBT	Input terminals, IO-Link communication terminals, Signal output terminals	M12 male screw

Rain Mounting (order separately)

Support rail (Material: Aluminum)

PFP-100N
PFP-50N

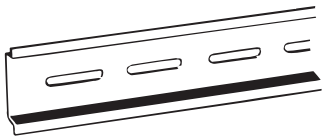

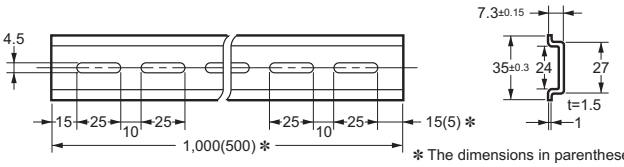

✻ The dimensions in parentheses are for PFP-50N.

Model
PFP-100N
PFP-50N

Support rail (Material: Aluminum)

PFP-100N2

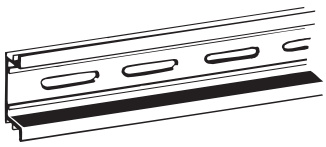

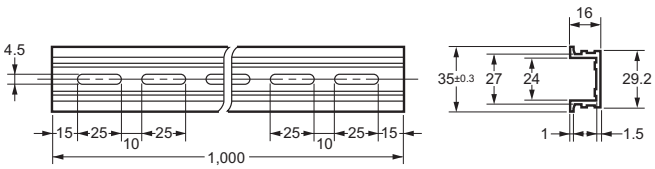

Model
PFP-100N2

End Plate

PFP-M

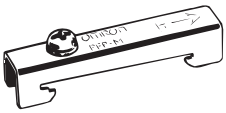

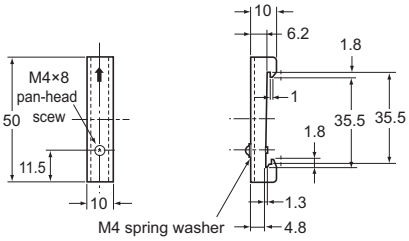

Model
PFP-M

Tools for M12 threaded connectors

The S8NR-B/S8R-BB supports the use of M12 screw-type connectors.
Use them to tighten the fixture of the M12 threaded connector to the specified torque value.

Torque Wrench
XY2F-0004

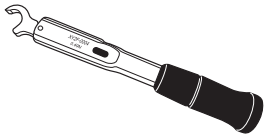

Connector Cables

Cable for Input Connector

Appearance	Manufacturer	Protective structure	Specification	Connector	Cable connection direction	No. of cable conductors	Cable length (M)	Model
	OMRON	IP65	M12 socket (S-coding, Female) -M12 Plug (S-coding, Male)	Smartclick	Straight/ straight	3	0.5	**XS5W-S321-B22-F**
							1	**XS5W-S321-C22-F**
							2	**XS5W-S321-D22-F**
							3	**XS5W-S321-E22-F**
							5	**XS5W-S321-G22-F**
							10	**XS5W-S321-J22-F**
							15	**XS5W-S321-K22-F**
							20	**XS5W-S321-L22-F**
	OMRON	IP65	M12 socket (S-coding, Female) -Flying leads	Smartclick	Straight	3	0.5	**XS5F-S321-B22-F**
							1	**XS5F-S321-C22-F**
							2	**XS5F-S321-D22-F**
							3	**XS5F-S321-E22-F**
							5	**XS5F-S321-G22-F**
							10	**XS5F-S321-J22-F**
							15	**XS5F-S321-K22-F**
							20	**XS5F-S321-L22-F**
---	OMRON	IP67	M12 socket (S-coding, Female) -M12 Plug (S-coding, Male)	Screw	Straight/ straight	3	2	**XS2WP-S321-0200**
							5	**XS2WP-S321-0500**
							10	**XS2WP-S321-1000**
							20	**XS2WP-S321-2000**
---	OMRON	IP67	M12 socket (S-coding, Female) -Flying leads	Screw	Straight	3	2	**XS2FP-S321-0200**
							5	**XS2FP-S321-0500**
							10	**XS2FP-S321-1000**
							20	**XS2FP-S321-2000**

Cable for Output Connector (M12, A-coded)

Appearance	Manufacturer	Protective structure	Specification	Connector	Cable connection direction	No. of cable conductors	Cable length (M)	Model
	OMRON	IP65/IP67	M12 socket (A-coding, Female) -M12 Plug (A-coding, Male)	Smartclick	Straight/ straight	4	0.5	**XS5W-D421-B81-F**
							1	**XS5W-D421-C81-F**
							2	**XS5W-D421-D81-F**
							3	**XS5W-D421-E81-F**
							5	**XS5W-D421-G81-F**
							10	**XS5W-D421-J81-F**
							15	**XS5W-D421-K81-F**
							20	**XS5W-D421-L81-F**
	OMRON					5	0.5	**XS5W-D521-BG1-F**
							1	**XS5W-D521-CG1-F**
							2	**XS5W-D521-DG1-F**
							3	**XS5W-D521-EG1-F**
							5	**XS5W-D521-GG1-F**
							10	**XS5W-D521-JG1-F**
							15	**XS5W-D521-KG1-F**
							20	**XS5W-D521-LG1-F**
	OMRON	IP65/IP67	M12 Plug (A-coding, Male) -Flying leads	Smartclick	Straight	4	0.3	**XS5H-D421-A80-F**
							0.5	**XS5H-D421-B80-F**
							1	**XS5H-D421-C80-F**
							2	**XS5H-D421-D80-F**
							3	**XS5H-D421-E80-F**
							5	**XS5H-D421-G80-F**
	OMRON					5	0.5	**XS5H-D521-BG0-F**
							1	**XS5H-D521-CG0-F**
							2	**XS5H-D521-DG0-F**
							3	**XS5H-D521-EG0-F**
							5	**XS5H-D521-GG0-F**

Cable for Output Connector (M12, L-coded)

Appearance	Manufacturer	Protective structure	Specification	Connector	Cable connection direction	No. of cable conductors	Cable length (M)	Model
	OMRON	IP65	M12 socket (L-coding, Female) -M12 Plug (L-coding, Male)	Smartclick	Straight/ straight	5	0.5	**XS5W-L521-B12-F**
							1	**XS5W-L521-C12-F**
							2	**XS5W-L521-D12-F**
							3	**XS5W-L521-E12-F**
							5	**XS5W-L521-G12-F**
							10	**XS5W-L521-J12-F**
							15	**XS5W-L521-K12-F**
							20	**XS5W-L521-L12-F**
	OMRON	IP65	M12 Plug (L-coding, Male) -Flying leads	Smartclick	Straight	5	0.5	**XS5H-L521-B12-F**
							1	**XS5H-L521-C12-F**
							2	**XS5H-L521-D12-F**
							3	**XS5H-L521-E12-F**
							5	**XS5H-L521-G12-F**
							10	**XS5H-L521-J12-F**
							15	**XS5H-L521-K12-F**
							20	**XS5H-L521-L12-F**
---	OMRON	IP67	M12 socket (L-coding, Female) -M12 Plug (L-coding, Male)	Screw	Straight/ straight	5	1	**XS2WP-L521-0100**
							2	**XS2WP-L521-0200**
							5	**XS2WP-L521-0500**
							10	**XS2WP-L521-1000**
---	OMRON	IP67	M12 Plug (L-coding, Male) -Flying leads	Screw	Straight	5	1	**XS2HP-L521-0100**
							2	**XS2HP-L521-0200**
							5	**XS2HP-L521-0500**
							10	**XS2HP-L521-1000**

Cable for IO-Link Communication Connection

Appearance	Manufacturer	Protective structure	Specification	Connector	Cable connection direction	No. of cable conductors	Cable length (M)	Model
	OMRON	IP65/IP67	M12 socket (A-coding, Female) -M12 Plug (A-coding, Male)	Smartclick	Straight/ straight	4	0.5	**XS5W-D421-B81-F**
							1	**XS5W-D421-C81-F**
							2	**XS5W-D421-D81-F**
							3	**XS5W-D421-E81-F**
							5	**XS5W-D421-G81-F**
							10	**XS5W-D421-J81-F**
							15	**XS5W-D421-K81-F**
							20	**XS5W-D421-L81-F**
	OMRON					5	0.5	**XS5W-D521-BG1-F**
							1	**XS5W-D521-CG1-F**
							2	**XS5W-D521-DG1-F**
							3	**XS5W-D521-EG1-F**
							5	**XS5W-D521-GG1-F**
							10	**XS5W-D521-JG1-F**
							15	**XS5W-D521-KG1-F**
							20	**XS5W-D521-LG1-F**
	OMRON	IP65/IP67	M12 socket (A-coding, Female) -Flying leads	Smartclick	Straight	4	0.5	**XS5F-D421-B80-F**
							1	**XS5F-D421-C80-F**
							2	**XS5F-D421-D80-F**
							3	**XS5F-D421-E80-F**
							5	**XS5F-D421-G80-F**
							10	**XS5F-D421-J80-F**
							15	**XS5F-D421-K80-F**
							20	**XS5F-D421-L80-F**
	OMRON					5	0.5	**XS5F-D521-BG0-F**
							1	**XS5F-D521-CG0-F**
							2	**XS5F-D521-DG0-F**
							3	**XS5F-D521-EG0-F**
							5	**XS5F-D521-GG0-F**
							10	**XS5F-D521-JG0-F**
							15	**XS5F-D521-KG0-F**
							20	**XS5F-D521-LG0-F**

Safety Precautions

Refer to *Safety Precautions* for All Power Supplies.

Warning Indications

⚠WARNING	Warning Level Indicates a potentially hazardous situation which, if not avoided, will result in minor or moderate injury, or may result in serious injury or death. Additionally, there may be significant property damage.
⚠CAUTION	Caution level Indicates a potentially hazardous situation which, if not avoided, may result in minor or moderate injury or in property damage.
Precautions for Safe Use	Supplementary comments on what to do or avoid doing, to use the product safely.
Precautions for correct use	Supplementary comments on what to do or avoid doing, to prevent failure to operate, malfunction or undesirable effect on product performance.

Meaning of Product Safety Symbols

	General instructions Used for general mandatory action precautions for which there is no specified symbol.
	Caution against electric shock Used to warn of the risk of electric shock under specific conditions.
	Caution against high temperatures Used to warn of the risk of minor injury caused by high temperatures.
	No disassembly Use to indicate prohibition when there is a risk of minor injury from electrical shock or other source if the product is disassembled.

⚠CAUTION

Minor electric shock, fire, or Product failure may occasionally occur. Do not disassemble, modify, or repair the Product or touch the interior of the Product.

Minor burns may occasionally occur. Do not touch the Product while power is being supplied or immediately after power is turned OFF.

Precautions for Safe Use

Installing/Storage Environment

- Store the Product at a temperature of -25 to 85°C and a humidity of 5 to 95% or less.
- To maintain the performance of the maintenance forecast monitor, store the Product at a temperature of -20 to 30°C and a relative humidity of 25 to 70% when storing it for more than three months. (360 W/600 W)
- When installing the Product, ensure adequate heat dissipation to improve the long-term reliability of the equipment.
  Be sure to allow sufficient air circulation around the Product, and use the Product within the derating curves.
- The internal parts may occasionally deteriorate or be damaged. Do not use the Product in areas outside the derating curves.
- Internal parts may possibly be damaged. Do not use a current that exceeds the rated total output current of the power supply. If temporary peak currents occur repetitively, design the system so that the peak values do not exceed the peak load conditions. (360 W/600 W)
- Use the Product in locations with a relative humidity of 5 to 95% or less.
- Do not use the Product in low dew point environments.
- Do not use the Product outdoors or where it would be subjected to direct sunlight.
- Do not use the Product where it would be subjected to shock or vibration. A device such as a contact breaker may be a vibration source. Set the Product as far as possible from possible sources of shock or vibration.
- To prevent an accident due to the product falling, wear appropriate protective gear such as safety shoes, safety glasses, and a helmet when performing installation or replacement work.
- Due to degraded heat dissipation and loss of protective structure, internal parts may occasionally deteriorate or be damaged. Do not loosen the screws on the power supply unit.
- If the Product is used in an area with excessive electronic noise, be sure to separate the Product as far as possible from the noise sources.
- Do not use the Product in locations where oil mist is present.
- Do not use the Product in locations where it may be exposed to high-pressure water.
- Do not use the Product in locations where spatter may occur.
- Do not use the Product in locations where corrosive or volatile gases are generated.
- Avoid installing the Product in locations where the temperature changes rapidly, such as near exhaust outlets.
- Do not use the Product at altitudes above 3,000 m, as the protective structure may not be maintained.
- Do not use detergents or chemicals for cleaning.
- Do not connect a battery or other backup power supply to the output of the Product.
- Although some inverters have an output frequency of 50/60 Hz, they may cause internal temperature to rise and result in damage, if they are connected as the power source for the S8NR-S. Do not use the output from an inverter as the power source for the S8NR-S.
- When connecting a UPS to the input, do not use a UPS with a rectangular-wave output. A rise in internal temperature may cause smoke or malfunction.
- Do not use this Product as a foothold.
- Avoid contact with the Product when passing nearby.

Installation/Wiring

- Be sure to connect the ground completely. Because this is a PE (Protective Earth) terminal (⏚) specified by safety standards, electric shock or malfunction may occur if the grounding is incomplete.
  Note: The protective earthing required for safety can be ensured only by the PE terminal (⏚) of the input terminal (1). Use the PE terminal (⏚) as required.
- Minor fire may possibly occur. Ensure that input and output terminals are wired correctly.
- To prevent wiring materials from smoking or ignition, use the wiring materials given in the following table.

Recommend Cables:

Terminal (Main Unit side)	Connector Main Unit side	Recommended cables	
		Both-end connector	One-end connector
Input Terminal	M12-S (Plug)	XS5W-S321-□22-F	XS5F-S321-□22-F
Output Terminal	M12-A (Socket)	XS5W-D421-□81-F XS5W-D521-□G1-F	XS5F-D421-□80-F XS5F-D521-□G0-F
	M12-L (Socket)	XS5W-L521-□12-F	XS5H-L521-□12-F
IO-Link Communication Terminal	M12-A (Plug)	XS5W-D421-□81-F XS5W-D521-□G1-F	XS5H-D421-□80-F XS5H-D521-□G0-F
Signal Terminal	M12-A (Plug)	XS5W-D421-□81-F XS5W-D521-□G1-F	XS5H-D421-□80-F XS5H-D521-□G0-F

Use copper wires. Use stranded wire or solid wire (heat resistance: 75°C or higher).

- Do not insert or remove the Smart Click connector more than the durability limit of 50 cycles.

Branch Output (360 W/600 W)

- Do not repeat cutoff and recovery operations more than necessary, because internal components may deteriorate or be damaged.
- Cutoff performance is guaranteed according to the ambient temperature. Do not use the Product outside the derating curves.

Output Voltage Adjustment

Default Setting: Set at the rated voltage
(90 W)
Output voltage adjustment is not available.

(360 W/600 W)
Adjustment Range: The output voltage can be adjusted from 24 to 28 VDC using the Select Down Key/Select Up Key on the front panel.

- Adjust the output voltage using “V-O” in the setting mode.
- When decreasing the output voltage, the undervoltage alarm function may operate depending on its setting value.
- After adjusting the output voltage, ensure that the total output power and output current of each branch output do not exceed the rated output power and rated total output current.

For details, refer to the user’s manual.

Peak Current (360 W/600 W)

Peak current is the current that can exceed the rated current for a limited period of time. The Product can be used within the range that satisfies the following five conditions:

- Peak-current duration: $t_1 \leq 5$ s
- Peak current:
  Ip ≤ Maximum Peak Current = Rated Total Output Current × 150%
- Average output current: Iave ≤ Rated Total Output Current × 80%
- Peak-current duty ratio: Duty ≤ 10%
- Duty = $T_1/(t_1+t_2) \times 100$ [%] ≤ 10%
  The Product can be used at the rated current after completion of the t_2 period.

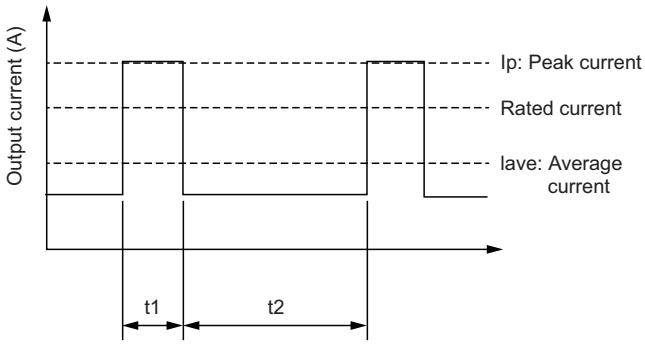

- Do not allow peak current to continue for more than 5 seconds. Also, do not exceed a 10% duty ratio. Doing so may cause Product damage.
- Do not allow the average current over one peak current cycle to exceed 80% of the rated total output current. Product damage may occur.
- Reduce the peak current and average output current depending on the ambient operating temperature and installation conditions.

Precautions for Correct Use

For information on detailed settings, refer to the User's Manual.

- The service life of the power supply is determined by the lifetime of the electrolytic capacitors used inside the unit. According to the Arrhenius law, also known as the "10°C-half-life rule," the lifetime of a capacitor is reduced to one-half when the ambient temperature increases by 10°C, and doubles when the ambient temperature decreases by 10°C. Therefore, lowering the internal temperature of the power supply extends its service life.

Mounting

- Mounting Direction
  Mount the S8NR-S unit as below.

Standard mounting

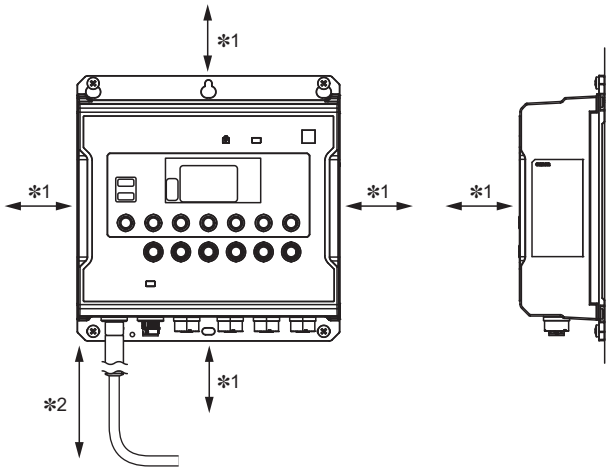

***1.** Top, bottom, left, right, and front: 15 mm min.
***2.** Secure sufficient space in consideration of cable mounting. Example: For the OMRON cable type XS5, provide approx. 150 mm.

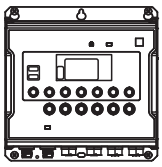

Standard mounting

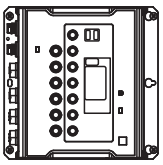

Horizontal mounting (90° clockwise)

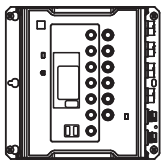

Horizontal mounting (90° counterclockwise)

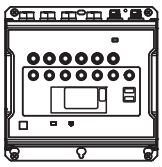

Inverted mounting

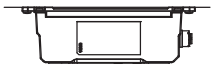

Downward mounting

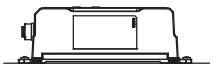

Upward mounting

- The S8NR-S type is a wall-mount product and refer to the Mounting hole machining dimensions when installing the unit.
- When mounting the Product, ensure sufficient space for heat dissipation and wiring.

Input Voltage Tolerance

90 W
- Rating: 100 to 240 VAC
- Allowable AC input range: -15 to 10% (85 to 264 VAC)
- When using an input voltage less than 100 VAC, reduce the load calculated with derating 1%/V.

360 W
- Rating: 100 to 240 VAC
- Allowable AC input range: -15 to 10% (85 to 264 VAC)
- When using an input voltage less than 100 VAC, reduce the load calculated with derating 1%/V.

600 W
- Rating: 200 to 240 VAC
- Allowable AC input range: -15 to 10% (170 to 264 VAC)
- When using an input voltage less than 200 VAC, reduce the load calculated with derating 0.5%/V.

Overcurrent Protection (90 W)

The overcurrent protection circuit automatically reduces the output voltage in the event of a short circuit or overcurrent, thereby protecting the Product itself. When the overcurrent condition is removed, the Product automatically returns to normal operation.
Internal parts may deteriorate or be damaged in rare cases.
Do not use this Product in applications where inrush current or overload conditions frequently occur on the load side.

Overvoltage Protection (90 W)

The Product detects an overvoltage condition to prevent excessive voltage from being applied to the load due to a failure of the internal feedback circuit or other causes.
If an excessive voltage of approximately 130% or more of the rated output voltage is output, the output voltage is cut OFF.
To restore operation, turn the input power OFF, wait for at least 3 minutes, and then turn the input power ON again.

DC OK Signal Output (90 W)

When the output voltage is 90% or more of the rated output voltage, the internal MOS FET relay turns ON (conducts).

- MOS FET relay outputs: 30 VDC max., 50 mA max.,
  residual voltage when ON: 2 V max.,
  leakage current when OFF: 0.1 mA max.
- Wire all output signal circuits correctly. Internal current control circuits are not provided internally for output signals. Do not allow the output current to exceed 50 mA.
- After completing wiring, confirm that the circuits operate correctly.

Abnormal Voltage Tripping (360 W/600 W)

1. The S8NR-S has an abnormal voltage tripping function. When the output voltage exceeds the set value, all branch outputs are shut off. However, this function does not protect the load or internal parts from high voltages in all situations. Use the output voltage within the rated range.
2. Outputs may be cut off by the abnormal voltage protection with loads that generate reverse peak electromotive force.

Abnormal Current Tripping (360 W/600 W)

The S8NR-S has an abnormal current tripping function. A branch output will be cut off if its current exceeds a preset value. Also, all branch outputs will be cut off if their total peak output current exceeds a specified value.

Note: 1. Continuing operation with overcurrent may occasionally result in deterioration or destruction of internal elements.
Note: 2. Do not use the Power Supply Unit for applications in which load inrush current or overload will frequently occur. Doing so may result in deterioration or damage to internal components.

Maintenance Forecast Monitor Function (360 W/ 600 W)

The accuracy of the maintenance forecast monitor function and the accumulated operating time may be reduced in applications where the AC input turns ON and OFF frequently.
Under general usage conditions, the S8NR-S will reach the replacement notification threshold in a few years to over a decade. For long-term use, regularly check that the replacement period does not fall below 0.5 years by monitoring the display or by confirming it through communication.

Startup Sequence and Shutdown Sequence Function (360 W/600 W)

When using multiple units of this product, the sequence function is guaranteed between branch outputs within a single unit, but time synchronization between units cannot be achieved.

Dielectric Strength Test

(90 W)
The S8NR-S is designed to withstand 2,000 VAC for 1 minute between <input terminal (1), pins 1 and 3 grouped together> and <PE terminal ⏚, output terminals, and signal terminals (2) (3) grouped together>.
When performing the withstand-voltage test, set the cutoff current of the hipot tester to 20 mA.

(360 W)
The S8NR-S is designed to withstand 2,000 VAC for 1 minute between <Input terminal (1) pins 1 and 3 (grouped)> and <PE terminal ⏚, branch output terminals and IO-Link communication terminals (grouped) (2), (3), and (4)>. When performing the withstand-voltage test, set the cutoff current of the hipot tester to 20 mA.

Note: 1. The S8NR-S may possibly be damaged from the impulse voltage if a testing device switch is used to abruptly apply or shut off 2,000 VAC. Increase the applied voltage gradually using the voltage adjustment on the testing device.

Note: 2. When testing terminals together, always short the specified terminals so that the voltage is applied to all of the terminals at the same time.

Insulation Resistance Test

When testing the insulation resistance, use a DC resistance meter at 500 VDC.

Note: When performing the test, be sure to short-circuit all output terminals(+, -) and signal terminals to prevent damage.

No Output Voltage

The internal circuit's overcurrent protection or overvoltage protection may operate. Alternatively, the latch protection circuit may operate if there is a lightning surge or other large voltage applied to the input. Contact OMRON if there is still no output voltage after checking the following two points:

- Checking Overcurrent Protection
  Check whether the load is in an overcurrent or short-circuited state. Remove the wires to the load before checking.
- Checking Overvoltage Protection and Latching Protection
  Turn the power supply OFF and leave it OFF for at least 3 minutes, then turn it ON again.
- When the tripping alarm output operates, always remove the cause of the output first and then reset the alarm.
- When cycling the input power supply, always remove any problems first and then turn ON the input power supply.
- If short-circuit or overcurrent conditions continue, internal parts may occasionally deteriorate or be damaged.

Displaying the Output Voltage (360 W/600 W)

The voltage detection function monitors the voltage inside the circuit after AC/DC conversion.
The displayed voltage will differ slightly from the value at the power supply output terminals due to internal voltage drop.
To accurately confirm the output voltage, measure the voltage at the output connector.

Prohibition of Parallel Connection

Do not connect branch outputs from the S8NR-S in parallel (360 W/ 600 W). Also, do not connect the branch outputs in parallel with branch outputs of other S8NR-S Units.

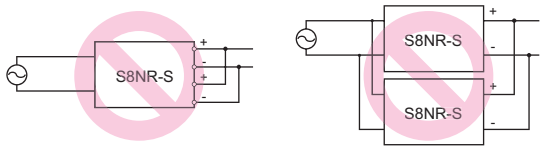

Parallel connection with other Branch output circuits is Not supported.

Mounting Bracket (Optional)

Always use the screws provided as accessories.
Recommended tightening torque for mounting screws: 0.5 to 0.6 N·m

Disposal

When disposing of the item, treat the S8NR-S as industrial waste.

Inrush current, startup time, Outputs hold time

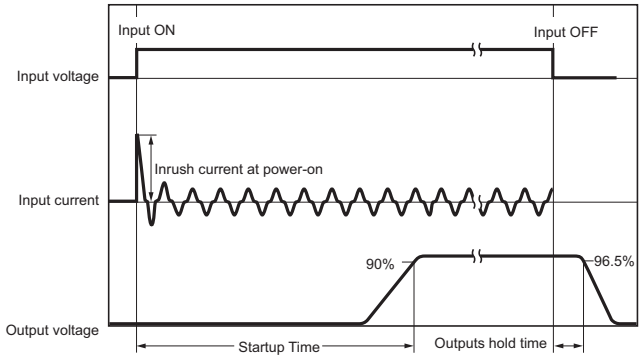

Note: When N units are used via branch connectors or similar means, an inrush current equal to N times that of single-unit operation will flow. In particular, to prevent external fuses from blowing or breakers from not operating due to the inrush current, thoroughly check the blowing characteristics of the fuses and the operating characteristics of the breakers, and select them accordingly.

Connectors and Cables

Install using a torque not exceeding the specified value.

- The proper tightening torque for M12 connectors is 0.39 to 0.49 N·m.
- For M12 Smart Click connector engagement, securely tighten by hand until the engagement completion mark is reached.
- Always turn off the power before connecting or disconnecting connectors.
- Do not forcibly bend or pull the cable. Do not place heavy objects on the cable sheath, as this may cause disconnection.

Smartclick installation method

1. Align the polarity key inside the connector and insert the projection on the plug fully into the groove on the socket.

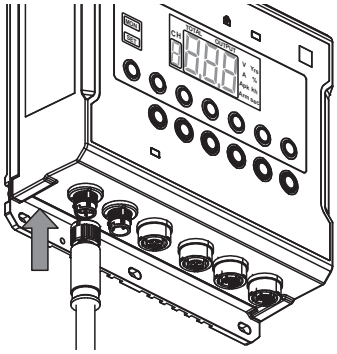

2. Rotate the cable retainer approximately 1/8 turn to the right. When you feel or hear a 'click,' the coupling is complete. You can also confirm by checking the coupling marks on the plug and socket.

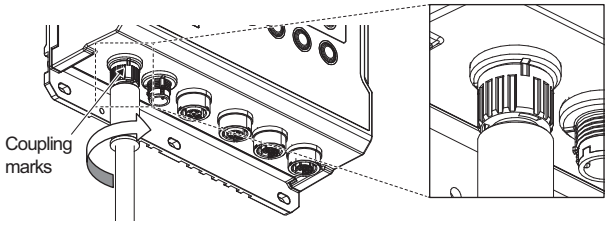

Conformance to EU and UK Directives

Refer to the datasheet and instruction manual for details on the operating conditions for EMC compliance.

Warning: When IO-Link Communication is used, the S8NR-S is Class A product. In a residential, commercial, or light industrial environment, it may cause radio interference. The S8NR-S is not intended to be installed in a residential environment. In a commercial or light industrial environment with connection to a commercial power supply, the user may be required to take adequate measures to reduce interference.

Warranty and Limitations of Liability

WARRANTY
The Power Supply warranty is valid for a period of three years from the date of shipment from the factory.
LIMITATIONS OF LIABILITY
The warranty is valid only for the following operating conditions.
1. Average ambient operating temperature of the Power Supply: 40°C max.
2. Average load rate of 80% max.
3.Mounting method: Standard mounting
Note: The maximum ratings must be within the derating curve.

If the Power Supply fails for reasons attributable to OMRON within the above warranty period, OMRON will repair or replace the faulty part of the Power Supply at the place of purchase or the place where the Power Supply delivered without charge.
This warranty does not cover the following types of failures.

1. Failures that result from handling or operation of the product under conditions or in environments that are not given in this document and not given in any other specifications exchanged between OMRON and the customer.
2. Failures that originate in causes other than the delivered product itself
3. Failures caused by disassembly, modification, or repair of the Power Supply by anyone other than OMRON
4. Failures caused by applications or uses for which the product was not originally intended.
5. Failures caused by factors that could not be anticipated with the scientific or technical knowledge available when the Power Supply was shipped.
6. Failures caused by other causes for which OMRON is not responsible, such as natural disasters and other acts of God.
   This warranty is limited to the individual Power Supply that was delivered and does not cover any secondary, subsequent, or related damages.

Recommended Replacement Periods and Periodic Replacement for Preventive Maintenance

The recommended replacement period for preventive maintenance is greatly influenced by the installation environment of the Power Supply. As a guideline, the recommended replacement period is 7 to 10 years.✻
To prevent failures or accidents that can be caused by using a Power Supply beyond its service live, we recommend that you replace the Power Supply as early as possible within the recommended replacement period. However, bear in mind that the recommended replacement period is for reference only and does not guarantee the life of the Power Supply.

Many electronic components are used in the Power Supply and the Power Supply depends on the correct operation of these components to achieve the original Power Supply functions and performance. However, the influence of the ambient temperature on aluminum electrolytic capacitors is large, and the service life is reduced by half for each 10°C rise in temperature (Arrhenius law). When the capacity reduction life of the electrolytic capacitor is reached, the Power Supply failures or accidents may occur. We therefore recommend that you replace the Power Supply periodically to minimize product failures or accidents in advance.

The recommended replacement period applies under the following conditions: rated input voltage, load rate of 50% max., ambient temperature of 40°C max., and the standard mounting method.
This product model is designed with a service life of 10 years minimum under the above conditions.

DC Blocking Box

S8R-BB

Features highly reliable G7SA and G7S-□-E Forcible Guided Relays in an IP67 enclosure, enabling easy construction of safety circuits outside the control panel

- Operates in ambient temperatures from -25 to 55°C
- Supports installation at altitudes up to 3,000 m
- Easy wiring with Smartclick connectors

Note: Please refer to OMRON's website "SISTEMA Library" for machine safety reliability data required for safety circuit evaluation.
https://www.ia.omron.com/support/sistemalibrary/index_jp.html

Smartclick

For the most recent information on models that have been certified for safety standards, refer to your OMRON website

⚠ **Please refer to *Power Supply Common Precautions* and *Safety Precautions* on page 64.**

Model Number Structure

Model Number Legend

S8R-BB-□□□□

Series 1 2

1. **Rated Current**
   06: 06 A
   10: 10 A
2. **Number of connectors (Coil terminals/EDM terminals)**
   A1: M12-A (8 Pins) Connector×1
   A2: M12-A (5 Pins) Connector×2

Ordering Information

Main Unit

Circuit configuration	Rated Voltage (Input/Output)	Rated Current (Input/Output)	Coil Rated Voltage	Model
Input/Output contact section: Two 1a (NO) contacts Connected in series EDM section: Two 1b (NC) contacts connected in series	24 VDC	6 A (Built-in G7SA)	24 VDC	**S8R-BB06A1**
				S8R-BB06A2
		10 A (Built-in G7S-□-E)		**S8R-BB10A1**
				S8R-BB10A2

Mounting Brackets (Sold separately)

Name	Model
DIN-Rail Mounting Brackets for S8R-BB06	**S82Y-RBB01DIN**
DIN-Rail Mounting Brackets for S8R-BB10	**S82Y-RBB02DIN**

Waterproof Caps (Sold separately)

Name	Model
Waterproof caps for socket connectors (2 pcs./set)	**XS5Z-12**
Waterproof caps for plug connectors	**XS5Z-13**

Smartclick is a trademark or registered trademark of OMRON Corporation in Japan and other countries.

Specifications

Model			S8R-BB06□□	S8R-BB10□□
Input Conditions (between 13 and -VI1, between +VI2 and -VI2)		Rated voltage	24 V	
		Allowable voltage range	21.6 to 28.0 V	
		Rated current	6 A	10 A
Output Characteristics (between 14 and -VO1, +VO2 and -VO2)		Rated voltage	24 V	
		Allowable voltage range	21.6 to 28.0 V	
		Rated current	6 A	10 A
Signal Conditions	A1/A2	Rated voltage	24 V	
		Allowable voltage range	21.6 to 26.4 V	
		Rated current ✻1	50 mA	100 mA
		Power consumption ✻1	1.2 W	2.2 W
	EDM	Rated voltage	24 V	
		Allowable voltage range	30 V max.	
		Rated current	2 A	
Electrical Characteristics		Must operate voltage	19.2 V max.	
		Must release voltage	2.4 V min.	
		Resistance (between 13 and 14) ✻2	300 mΩ max.	
Operating Characteristics		Operating time ✻3	20 ms max.	50 ms max.
		Release time ✻3	20 ms max.	50 ms max.
		Response time ✻4	10 ms max.	20 ms max.
		Maximum operating frequency — Mechanical	36,000 operations/h	18,000 operations/h
		Maximum operating frequency — Rated load	1,800 operations/h	
Insulation performance		• Dielectric strength voltage 600 VAC 1 min. Detection current 20 mA • Insulation resistance 500 VDC 20 MΩ min.	S8R-BB□□A1 Between <Input and output terminals (grouped, FE excluded)> and <EDM/coil terminal pins 6, 7, and 8 (grouped)> Between <Input and output terminals (grouped, FE excluded)> and <EDM/coil terminal pins 1 and 2 (grouped)> Between <Input and output terminals (grouped, FE excluded)> and <FE> Between <EDM/coil terminal pins 6, 7, and 8 (grouped)> and <FE> Between <EDM/coil terminal pins 1 and 2 (grouped)> and <FE> S8R-BB□□A2 Between <Input and output terminals (grouped, FE excluded)> and <Coil terminals (grouped)> Between <Input and output terminals (grouped, FE excluded)> and <EDM terminals (grouped)> Between <Input and output terminals (grouped, FE excluded)> and <FE> Between <Coil terminals (grouped)> and <FE> Between <EDM terminals (grouped)> and <FE>	
Contact switching performance		Resistance load	24 VDC 6 A	24 VDC 10 A
		Inductive load ✻5	24 VDC 1 A	24 VDC 2 A
Reliability		Electrical Durability ✻5	100,000 operations min. (Under the above load conditions)	100,000 operations min. (Under the above load conditions)
		Mechanical Durability ✻6	10,000,000 operations min.	
Environment		Ambient operating temperature	-25 to 55°C (with no condensation or icing)	
		Storage temperature	-25 to 65°C	
		Ambient operating humidity	5 to 85% max.	
		Storage humidity	5 to 85% max.	
		Altitude	3,000 m max.	
		Vibration resistance ✻7	10 to 55 Hz, 0.375 mm single amplitude 3 times in X, Y, Z directions 2h each	10 to 55 Hz, 0.375 mm single amplitude in X, Y, Z directions 2h each (excluding the front horizontal direction)
		Shock resistance ✻7	150m/s^2, 3 times each in ±X, ±Y, ±Z directions.	150m/s^2, 3 times each in ±X, ±Y, ±Z directions. (excluding front horizontal mounting)
Construction		Weight (main unit)	650 g max.	900 g max.
		Cooling fan	None	
		Protective structure (dustproof and waterproof) ✻8	IP65/IP67	
		UL Enclosure Type ✻8✻9	Type 1	
Standards		Safety standards	UL 508 (Listing). Pol3 CSA C22.2 No.107.1. Pol3	
		CE marking (RoHS Directive)	EN IEC 63000	

Note: 1. The above values are initial values.
Note: 2. Electrical characteristics and operating characteristics are values at an ambient temperature of 23°C.
✻1. Measurement conditions: Rated voltage
✻2. Measurement conditions:
S8R-BB06□□: 5 V, 1 A, voltage drop method
S8R-BB10□□: 5 V, 10 mA, voltage drop method
✻3. Measurement conditions: Rated voltage
Ambient temperature: 23°C
Bounce time is not included.

✻4. Measurement conditions: Rated voltage
Ambient temperature: 23°C
The time from when the coil voltage is turned OFF until the a-contact turns OFF, including bounce time.

✻5. Values under the following conditions:
Contact voltage: 24 V
Coil voltage: 24 V
Switching frequency: 1,800 operations/h
Ambient temperature: 25°C
Inductive load performance: S8R-BB06□□: L/R=48 ms
S8R-BB10□□: L/R=96 ms

✻6. Switching frequency: 36,000 operations/h

✻7. For installation, be sure to check *Installation* described on page 66.

✻8. With waterproof caps attached to unused terminals.

✻9. The IP rating (protection against dust and water) and the UL Enclosure Type (enclosure classification) are based on different evaluation criteria.
The UL Enclosure Type 1 of this product is provided to meet the enclosure requirements of UL 508A and NFPA 79.

Connection

Block Diagrams

S8R-BB06□□
S8R-BB10□□

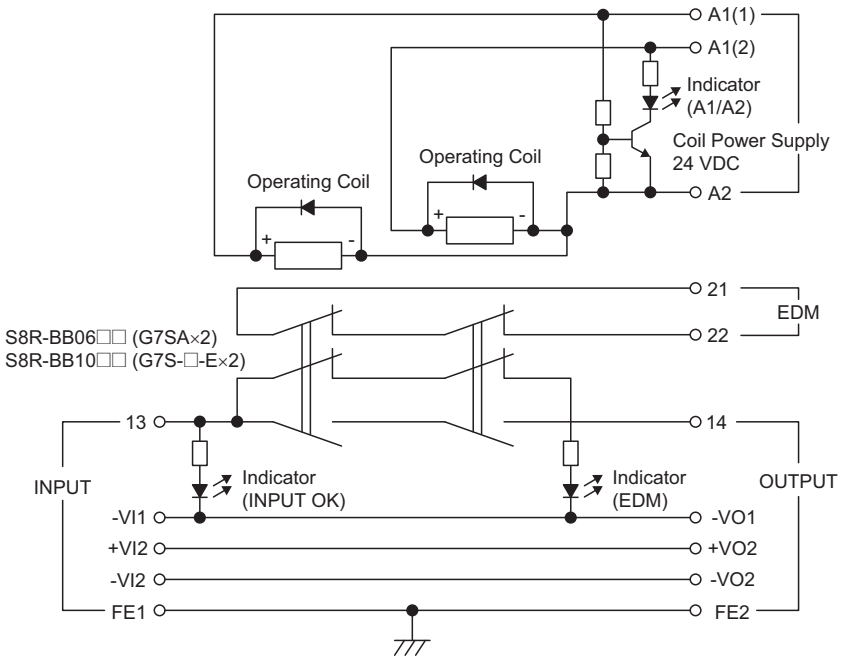

Constructions and Nomenclature

Nomenclature

S8R-BB□□A1

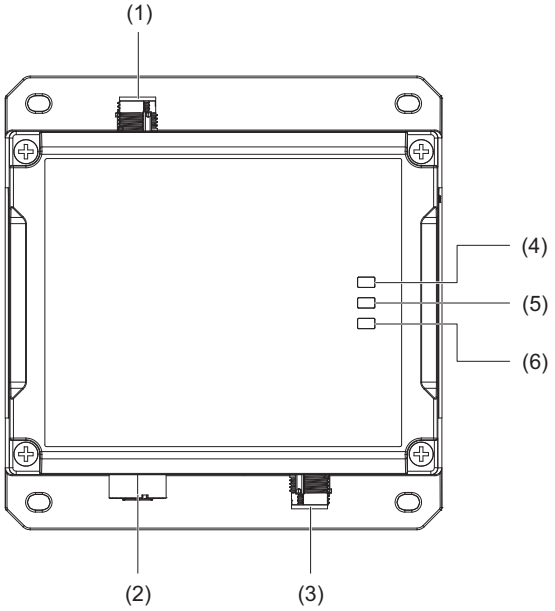

No.	Connector Name	Shape	Pin Number/Name
(1)	Input Terminal M12-L (Plug)	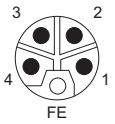	FE: FE1 (Functional Earth ⏚)
			1: +VI2
			2: -VI1
			3: -VI2
			4: 13
(2)	Output Terminal M12-L (Socket)	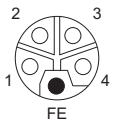	FE: FE2
			1: +VO2
			2: -VO1
			3: -VO2
			4: 14
(3)	EDM/Coil Terminal M12-A (Plug)	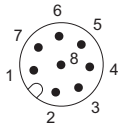	1: 21
			2: 22
			3: N/A
			4: N/A
			5: N/A
			6: A1 (1)
			7: A1 (2)
			8: A2
(4)	INPUT OK		Input Voltage Indicator (Green)
(5)	A1/A2		Coil Voltage Indicator (Orange)
(6)	EDM		EDM Indicator (Orange)

S8R-BB□□A2

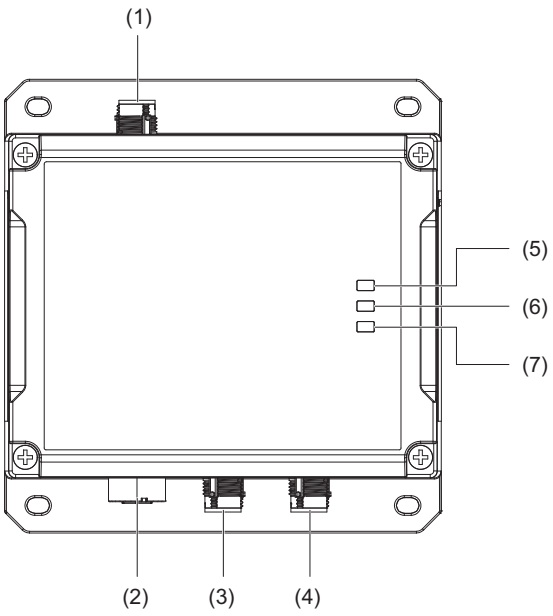

No.	Connector Name	Shape	Pin Number/Name
(1)	Input Terminal M12-L (Plug)	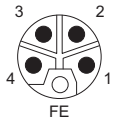	FE: FE1 (Functional Earth ⏚)
			1: +VI2
			2: -VI1
			3: -VI2
			4: 13
(2)	Output Terminal M12-L (Socket)	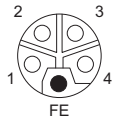	FE: FE2
			1: +VO2
			2: -VO1
			3: -VO2
			4: 14
(3)	Coil Terminal M12-A (Plug)	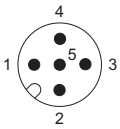	1: N/A
			2: A1 (1)
			3: A2
			4: A1 (2)
			5: N/A
(4)	EDM Terminal M12-A (Plug)	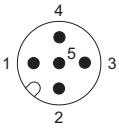	1: 21
			2: 22
			3: N/A
			4: N/A
			5: N/A
(5)	INPUT OK		Input Voltage Indicator (Green)
(6)	A1/A2		Coil Voltage Indicator (Orange)
(7)	EDM		EDM Indicator (Orange)

Characteristic Data

Derating curve

S8R-BB06A□

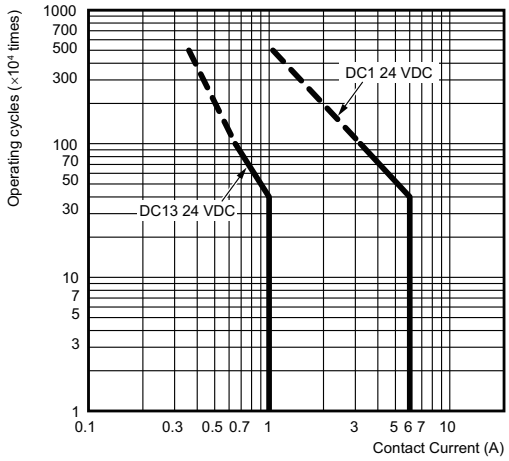

S8R-BB10A□

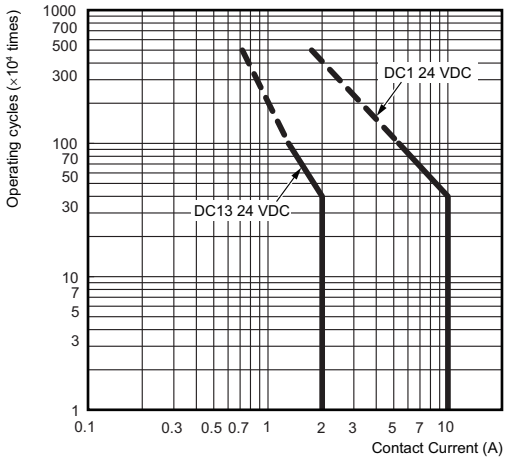

Functions

Operating Status and Corrective Actions Based on LED Indication Patterns

INPUT OK	A1/A2	EDM	Operating Status	Input Voltage	Coil Signal	Corrective Action
Lit Green	Lit Orange	Not Lit	Normal	ON	ON	---
Lit Green	Lit Orange	Lit Orange	b-contact welded	ON	ON	Replace the product
Lit Green	Not Lit	Lit Orange	Normal	ON	OFF	---
Lit Green	Not Lit	Not Lit	a-contact welded	ON	OFF	Replace the product
Not Lit	Lit Orange	Not Lit	DC power not applied	OFF	ON	Check the wiring
Not Lit	Not Lit	Not Lit	DC power not applied	OFF	OFF	Check the wiring

Dimensions

(Unit: mm)

Main Unit

S8R-BB06A□

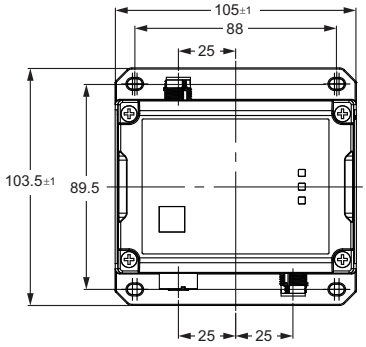

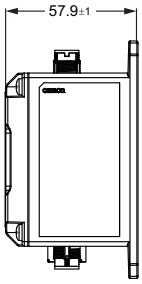

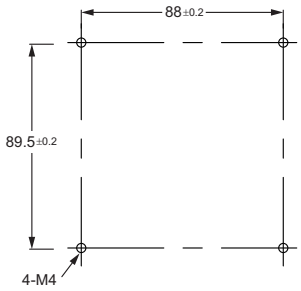

Mounting hole machining dimensions

S8R-BB06A1 (shown above)

S8R-BB10A□

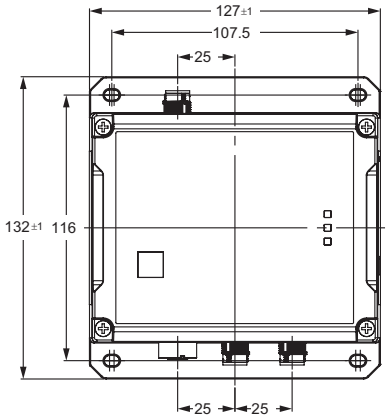

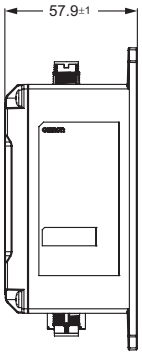

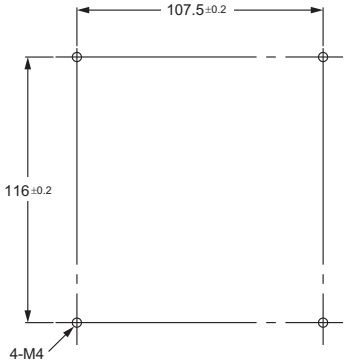

Mounting hole machining dimensions

S8R-BB10A2 (shown above)

Connector cover

Waterproof caps

XS5Z-12 and XS5Z-13 have Smartclick mechanism. There's no need to keep track of locking torque.

Appearance	Model	Material	Suitable Connectors for S8R-BB	Mounting part
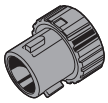	XS5Z-12	PBT	Output terminals	M12 female screw
	XS5Z-13	PBT	Input terminals, Coil terminals, EDM terminals, EDM/Coil terminals	M12 male screw

Mounting Brackets

DIN-Rail Mounting Brackets for S8R-BB06

S82Y-RBB01DIN

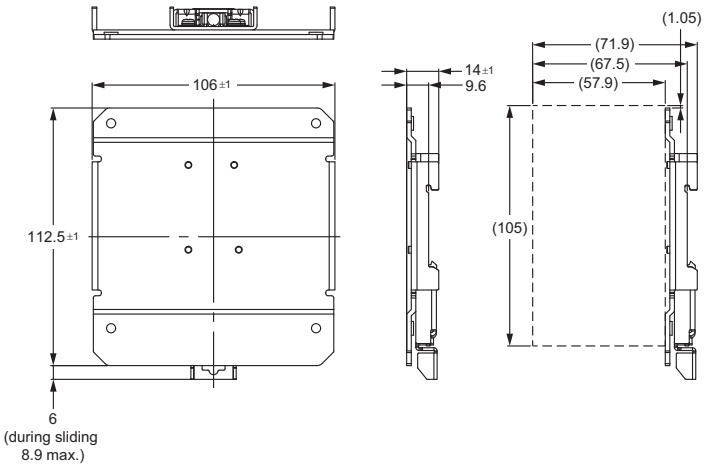

DIN-Rail Mounting Brackets for S8R-BB10

S82Y-RBB02DIN

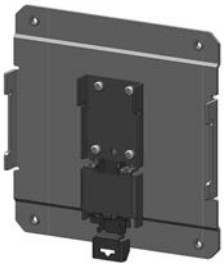

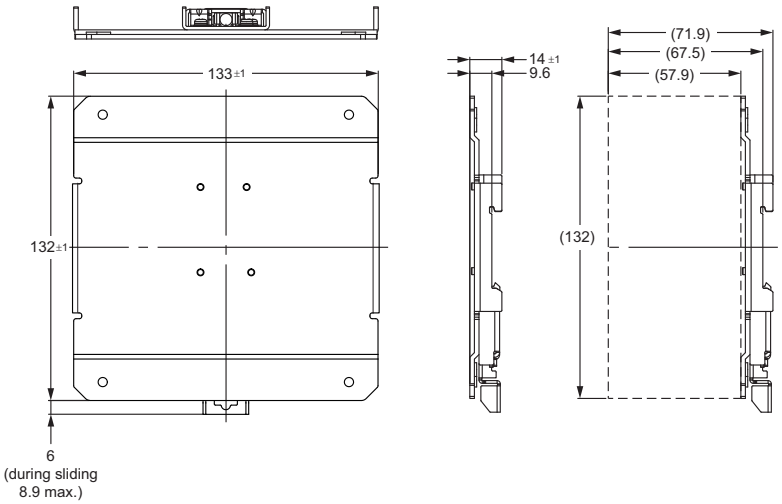

Tools for M12 threaded connectors

The S8NR-B/S8R-BB supports the use of M12 screw-type connectors.
Use them to tighten the fixture of the M12 threaded connector to the specified torque value.

Torque Wrench
XY2F-0004

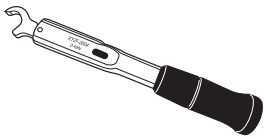

Connector Cables

Cable for Input Connector

Appearance	Manufacturer	Protective structure	Specification	Connector	Cable connection direction	No. of cable conductors	Cable length (M)	Model
	OMRON	IP65	M12 Socket (L-coding, Female) -M12 Plug (L-coding, Male)	Smartclick connector	Straight/ straight	5	0.5	**XS5W-L521-B12-F**
							1	**XS5W-L521-C12-F**
							2	**XS5W-L521-D12-F**
							3	**XS5W-L521-E12-F**
							5	**XS5W-L521-G12-F**
							10	**XS5W-L521-J12-F**
							15	**XS5W-L521-K12-F**
							20	**XS5W-L521-L12-F**
	OMRON	IP65	M12 Socket (L-coding, Female) -Flying leads	Smartclick connector	Straight	5	0.5	**XS5F-L521-B12-F**
							1	**XS5F-L521-C12-F**
							2	**XS5F-L521-D12-F**
							3	**XS5F-L521-E12-F**
							5	**XS5F-L521-G12-F**
							10	**XS5F-L521-J12-F**
							15	**XS5F-L521-K12-F**
							20	**XS5F-L521-L12-F**
---	OMRON	IP67	M12 Socket (L-coding, Female) -M12 Plug (L-coding, Male)	Screw	Straight/ straight	5	1	**XS2WP-L521-0100**
							2	**XS2WP-L521-0200**
							5	**XS2WP-L521-0500**
							10	**XS2WP-L521-1000**
---	OMRON	IP67	M12 Socket (L-coding, Female) -Flying leads	Screw	Straight	5	1	**XS2FP-L521-0100**
							2	**XS2FP-L521-0200**
							5	**XS2FP-L521-0500**
							10	**XS2FP-L521-1000**

Cable for Output Connector

Appearance	Manufacturer	Protective structure	Specification	Connector	Cable connection direction	No. of cable conductors	Cable length (M)	Model
	OMRON	IP65	M12 Socket (L-coding, Female) -M12 Plug (L-coding, Male)	Smartclick connector	Straight/ straight	5	0.5	**XS5W-L521-B12-F**
							1	**XS5W-L521-C12-F**
							2	**XS5W-L521-D12-F**
							3	**XS5W-L521-E12-F**
							5	**XS5W-L521-G12-F**
							10	**XS5W-L521-J12-F**
							15	**XS5W-L521-K12-F**
							20	**XS5W-L521-L12-F**
	OMRON	IP65	M12 Plug (L-coding, Male) -Flying leads	Smartclick connector	Straight	5	0.5	**XS5H-L521-B12-F**
							1	**XS5H-L521-C12-F**
							2	**XS5H-L521-D12-F**
							3	**XS5H-L521-E12-F**
							5	**XS5H-L521-G12-F**
							10	**XS5H-L521-J12-F**
							15	**XS5H-L521-K12-F**
							20	**XS5H-L521-L12-F**
---	OMRON	IP67	M12 Socket (L-coding, Female) -M12 Plug (L-coding, Male)	Screw	Straight/ straight	5	1	**XS2WP-L521-0100**
							2	**XS2WP-L521-0200**
							5	**XS2WP-L521-0500**
							10	**XS2WP-L521-1000**
---	OMRON	IP67	M12 Plug (L-coding, Male) -Flying leads	Screw	Straight	5	1	**XS2HP-L521-0100**
							2	**XS2HP-L521-0200**
							5	**XS2HP-L521-0500**
							10	**XS2HP-L521-1000**

Cable for Coil terminal Connector

Appearance	Manufacturer	Protective structure	Specification	Connector	Cable connection direction	No. of cable conductors	Cable length (M)	Model
	OMRON	IP65/IP67	M12 Socket (A-coding, Female) -M12 Plug (A-coding, Male)	Smartclick connector	Straight/ straight	4	0.5	**XS5W-D421-B81-F**
							1	**XS5W-D421-C81-F**
							2	**XS5W-D421-D81-F**
							3	**XS5W-D421-E81-F**
							5	**XS5W-D421-G81-F**
							10	**XS5W-D421-J81-F**
							15	**XS5W-D421-K81-F**
							20	**XS5W-D421-L81-F**
	OMRON					5	0.5	**XS5W-D521-BG1-F**
							1	**XS5W-D521-CG1-F**
							2	**XS5W-D521-DG1-F**
							3	**XS5W-D521-EG1-F**
							5	**XS5W-D521-GG1-F**
							10	**XS5W-D521-JG1-F**
							15	**XS5W-D521-KG1-F**
							20	**XS5W-D521-LG1-F**
	OMRON	IP65/IP67	M12 Socket (A-coding, Female) -Flying leads	Smartclick connector	Straight	4	0.5	**XS5F-D421-B80-F**
							1	**XS5F-D421-C80-F**
							2	**XS5F-D421-D80-F**
							3	**XS5F-D421-E80-F**
							5	**XS5F-D421-G80-F**
							10	**XS5F-D421-J80-F**
							15	**XS5F-D421-K80-F**
							20	**XS5F-D421-L80-F**
	OMRON					5	0.5	**XS5F-D521-BG0-F**
							1	**XS5F-D521-CG0-F**
							2	**XS5F-D521-DG0-F**
							3	**XS5F-D521-EG0-F**
							5	**XS5F-D521-GG0-F**
							10	**XS5F-D521-JG0-F**
							15	**XS5F-D521-KG0-F**
							20	**XS5F-D521-LG0-F**

Cable for EDM Terminal Connector

Appearance	Manufacturer	Protective structure	Specification	Connector	Cable connection direction	No. of cable conductors	Cable length (M)	Model
	OMRON	IP65/IP67	M12 Socket (A-coding, Female) -M12 Plug (A-coding, Male)	Smartclick connector	Straight/ straight	4	0.5	**XS5W-D421-B81-F**
							1	**XS5W-D421-C81-F**
							2	**XS5W-D421-D81-F**
							3	**XS5W-D421-E81-F**
							5	**XS5W-D421-G81-F**
							10	**XS5W-D421-J81-F**
							15	**XS5W-D421-K81-F**
							20	**XS5W-D421-L81-F**
	OMRON					5	0.5	**XS5W-D521-BG1-F**
							1	**XS5W-D521-CG1-F**
							2	**XS5W-D521-DG1-F**
							3	**XS5W-D521-EG1-F**
							5	**XS5W-D521-GG1-F**
							10	**XS5W-D521-JG1-F**
							15	**XS5W-D521-KG1-F**
							20	**XS5W-D521-LG1-F**
	OMRON	IP65/IP67	M12 Socket (A-coding, Female) -Flying leads	Smartclick connector	Straight	4	0.5	**XS5F-D421-B80-F**
							1	**XS5F-D421-C80-F**
							2	**XS5F-D421-D80-F**
							3	**XS5F-D421-E80-F**
							5	**XS5F-D421-G80-F**
							10	**XS5F-D421-J80-F**
							15	**XS5F-D421-K80-F**
							20	**XS5F-D421-L80-F**
	OMRON					5	0.5	**XS5F-D521-BG0-F**
							1	**XS5F-D521-CG0-F**
							2	**XS5F-D521-DG0-F**
							3	**XS5F-D521-EG0-F**
							5	**XS5F-D521-GG0-F**
							10	**XS5F-D521-JG0-F**
							15	**XS5F-D521-KG0-F**
							20	**XS5F-D521-LG0-F**

Cable for EDM/Coil terminal connector

Appearance	Manufacturer	Protective structure	Specification	Connector	Cable connection direction	No. of cable conductors	Cable length (M)	Model
	OMRON	IP65/IP67	M12 Socket (A-coding, Female) -M12 Plug (A-coding, Male)	Smartclick connector	Straight/ straight	8	0.5	**XS5W-D821-BK1-F**
							1	**XS5W-D821-CK1-F**
							2	**XS5W-D821-DK1-F**
							3	**XS5W-D821-EK1-F**
							5	**XS5W-D821-GK1-F**
							10	**XS5W-D821-JK1-F**
							15	**XS5W-D821-KK1-F**
							20	**XS5W-D821-LK1-F**
	OMRON		M12 Socket (A-coding, Female) -Flying leads	Smartclick connector	Straight	8	0.5	**XS5F-D821-BK0-F**
							1	**XS5F-D821-CK0-F**
							2	**XS5F-D821-DK0-F**
							3	**XS5F-D821-EK0-F**
							5	**XS5F-D821-GK0-F**
							10	**XS5F-D821-JK0-F**
							15	**XS5F-D821-KK0-F**
							20	**XS5F-D821-LK0-F**

Safety Precautions

Definitions of Precautions

Precautions for Safe Use	These refer to actions that should be performed or refrained from in order to ensure safe product usage.
Precautions for Correct Use	These refer to actions that should be performed or refrained from in order to prevent product breakage, malfunctioning, and negative effects to performance and functionality.

Precautions for Safe Use

Installing/Storage Environment

- Avoid installing the Product in locations where the temperature changes rapidly, such as near exhaust outlets.
- When installing the Product, pay close attention to heat dissipation in order to improve the long-term reliability of the equipment. Allow sufficient air circulation around the Product.
- Do not apply vibration or shock that exceeds the rated values. Abnormal vibration or shock may cause malfunction and may also result in deformation or damage to internal components, leading to operational failure. To prevent the application of abnormal vibration, install the Product in a location that is not affected by equipment that generates vibration, such as motors.
- Store the Product at an ambient temperature of -25 to 65°C and a relative humidity of 5 to 85%.
- Use the Product in locations with a relative humidity of 5 to 85%.
- Do not use the Product in low dew point environments.
- Do not use the Product at altitudes above 3,000 m, as the protective structure may not be maintained.
- Do not use the Product outdoors or in locations exposed to direct sunlight.
- Do not use the Product in locations where corrosive or volatile gases are generated.
- Do not use the Product as a foothold.
- When passing near the Product, take care to avoid contact.
- Do not use detergents or chemicals for cleaning.
- Due to degraded heat dissipation and loss of protective structure, internal parts may occasionally deteriorate or be damaged. Do not loosen the screws on the Product.
- Minor burns may occasionally occur. Do not touch the Product while power is ON or immediately after the power is turned OFF.
- Relay durability varies greatly depending on switching conditions. Before use, always verify actual operation under operating conditions and use the relay within a switching cycle range that does not cause performance problems. Continued use after performance deterioration may cause insulation failure between circuits or burnout of the relay itself.
- Long-term continuous energization of the coil accelerates deterioration of the coil insulation due to heat generated by the coil itself. In applications with light loads and low switching frequency, perform periodic inspections of contact continuity. If contacts are not switched for a long period, film formation on the contact surfaces may cause unstable contact. The inspection interval varies depending on the operating environment and load type.

Installation/Wiring

- To prevent accidents caused by the Product falling, wear appropriate protective equipment such as safety shoes, protective glasses, and a helmet when installing or replacing the Product.
- Always turn OFF the power before connecting or disconnecting connectors.
- Minor fire may possibly occur. Ensure that input and output terminals are wired correctly.
- To prevent wiring materials from smoking or ignition, use the wiring materials specified in the following table.

Recommend Cables:

Terminal (Product side)	Connector name (Product side)	Recommended cables
		One-end connector
Input Terminal	M12-L (Plug)	XS5F-L521-□12-F
Output Terminal	M12-L (Socket)	XS5H-L521-□12-F
Coil Terminal	M12-A (Plug)	XS5F-D421-□80-F
EDM Terminal	M12-A (Plug)	XS5F-D421-□80-F
EDM/Coil Terminal	M12-A (Plug)	XS5F-D821-□K0-F

- Use copper wires. Use stranded wire or solid wire (heat resistance: 75°C or higher).
- Do not insert or remove Smart Click connector more than the durability limit of 50 cycles.

Precautions for Correct Use

- During use, storage, and transportation, avoid direct sunlight and keep the Product at normal temperature, normal humidity, and normal pressure. Long-term storage or use in high-temperature and high-humidity environments may cause oxide or sulfide films to form on contact surfaces, resulting in contact failure. If the ambient temperature changes abruptly in high-temperature and high-humidity environments, condensation may occur inside the relay, which may lead to insulation failure or insulation deterioration due to tracking on insulating material surfaces.
  In addition, in high-humidity environments, load switching accompanied by relatively large arc discharge may generate blue-green corrosion products inside the relay. To prevent these phenomena, we recommend using the Product in a low-humidity environment.
- Never use the Product in flammable or explosive gas atmospheres. Arcing and heat generated during relay switching may cause fire or explosion.
- Do not use the product in environments where silicone gas, sulfur-containing gas (SO_2, H_2S), or organic gas is present. Long-term storage or use in sulfur-containing or organic gas environments may cause corrosion of the relay contact surfaces, resulting in unstable contact or contact failure. Long-term storage or use in a silicone gas environment may cause a silicone film to form on the relay contact surfaces, leading to contact failure.
- This Product uses G7SA (S8R-BB06) and G7S-□-E (S8R-BB10) relays. Carefully read and follow the *Precautions for Correct Use* of the above product, as well as those described in the *Common Precautions for All Relays with Forcibly Guided Contacts (1. Using Relays, 2. Selecting Relays, and 3. Circuit Design)*, and use the product correctly.
- Safety relays incorporate a structure known as forcibly guided contacts. Except for this feature, safety relays are basically the same as general-purpose relays. In other words, safety relays are not relays that never fail. When failures such as contact welding occur, the structure known as forcibly guided contacts allows the failure state to be detected by another circuit. Therefore, depending on the circuit configuration, if a safety relay fails due to contact welding or similar faults, power may not be shut off, resulting in a hazardous condition. Even if contact welding or similar faults occur in a power control circuit, ensure that power is reliably shut off and that restarting is not possible until the fault is removed by combining safety relays and providing redundancy and fault diagnosis functions in the circuit. For details, refer to the *Safety Components Technical Guide* (Cat. No. Y107).
- Use the Product within the rated voltage and rated current.
- Never apply a load that exceeds the contact ratings, such as the switching capacity of the internal relay. Doing so may not only impair the specified performance, such as causing insulation failure, contact welding, or poor contact, but may also result in damage or burnout of the relay itself.
- The maximum allowable coil voltage is limited by the coil temperature rise and by the heat resistance of the coil-insulation coating (exceeding that heat resistance may cause coil burnout or a layer short-circuit). In addition, it is constrained by the need to prevent thermal change and deterioration of insulating materials, to avoid damage to other control equipment, to avoid harm to personnel, and to prevent fire. Therefore, do not exceed the ratings specified in the catalog.
- Use a power supply with a ripple percentage of 5% or less for the internal relay operating power source.
  An increase in ripple (pulsating current) in the DC voltage applied to the coil may cause humming.
- Do not repeat cutoff and recovery operations more than necessary, because internal components may deteriorate or be damaged.
- Do not use the Product in applications where load-side inrush current or overload conditions occur frequently, as internal components may deteriorate or be damaged.
- Use a power supply equipped with an overcurrent protection function, such as the S8NR-S or an equivalent model.
  If a current exceeding the rated value flows, internal components may deteriorate or become damaged.
- Do not use the Product in locations where oil mist is present.
- Avoid using the Product in locations where it may be exposed to high-pressure water.
- Do not use the Product in locations where spatter may occur.

Input Voltage

- Input terminals and output terminals: 21.6 to 28.0 V
- Coil terminals: 21.6 to 26.4 V
- EDM terminals: 30 V max

Dielectric Strength Test

- S8R-BB□□A1
  Between <Input and output terminals (grouped, FE excluded)> and <EDM/coil terminal pins 6, 7, and 8 (grouped)>
  Between <Input and output terminals (grouped, FE excluded)> and <EDM/coil terminal pins 1 and 2 (grouped)>
  Between <Input and output terminals (grouped, FE excluded)> and <FE>
  Between <EDM/coil terminal pins 6, 7, and 8 (grouped)> and <FE>
  Between <EDM/coil terminal pins 1 and 2 (grouped)> and <FE>
- S8R-BB□□A2
  Between <Input and output terminals (grouped, FE excluded)> and <Coil terminals (grouped)>
  Between <Input and output terminals (grouped, FE excluded)> and <EDM terminals (grouped)>
  Between <Input and output terminals (grouped, FE excluded)> and <FE>
  Between <Coil terminals (grouped)> and <FE>
  Between <EDM terminals (grouped)> and <FE>

The above terminal combinations are designed to withstand 600 VAC for 1 minute.
When performing the test, set the cutoff current of the dielectric strength tester to 20 mA.

Note: 1. If 600 VAC is applied or interrupted abruptly using the tester switch, the impulse voltage generated may damage the Product. Increase or decrease the applied voltage gradually using the tester control.

Note: 2. To apply voltage simultaneously to each specified group of terminals, always short the terminals together.

Insulation Resistance Test

When performing the insulation resistance test, use a DC insulation resistance meter at 500 VDC.

Disposal

When disposing of the Product, treat it as industrial waste.

Installation

- Take adequate measures to ensure proper heat dissipation to increase the long-term reliability of the Product. Ensure sufficient air circulation around the product.

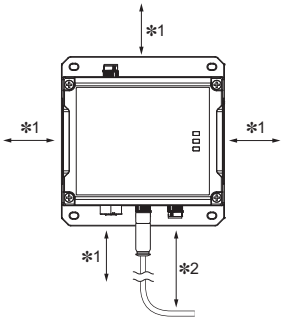

***1.** Top, bottom, left, and right: 15 mm min.
***2.** Secure sufficient space in consideration of cable mounting. Example: For the OMRON cable type XS5, provide approx. 150 mm.

Install the product only in orientations A to F shown in the figure below. Do not install the product in any other orientation. However, for the S8R-BB10□□, do not install the product in a horizontal orientation.

A. Standard mounting

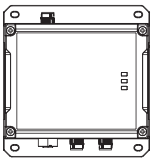

B. Upside-down installation

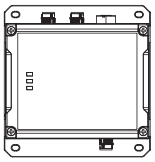

C. Horizontal installation (90° clockwise)

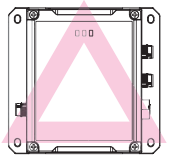

S8R-BB0□□ only

D. Horizontal installation (90° counterclockwise)

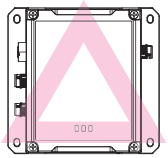

S8R-BB06□□ only

Flat mounting 1

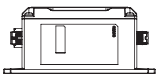

Flat mounting 2

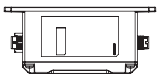

Cables

Install the cable using a torque not exceeding the specified value.

- The proper tightening torque for M12 connectors is 0.39 to 0.49 N·m.
- For M12 Smart Click connector engagement, securely tighten by hand until the engagement completion mark is reached.
- Do not forcibly bend or pull the cable. Do not place heavy objects on the cable sheath, as this may cause disconnection.
- Always turn OFF the power before connecting or disconnecting connectors.

Mounting Bracket (Optional)

Always use the screws provided as accessories.
Recommended tightening torque for mounting screws: 0.5 to 0.6 N·m

Terms and Conditions Agreement

Read and understand this catalog.

Please read and understand this catalog before purchasing the products. Please consult your OMRON representative if you have any questions or comments.

Warranties.

(a) Exclusive Warranty. Omron's exclusive warranty is that the Products will be free from defects in materials and workmanship for a period of twelve months from the date of sale by Omron (or such other period expressed in writing by Omron). Omron disclaims all other warranties, express or implied.

(b) Limitations. OMRON MAKES NO WARRANTY OR REPRESENTATION, EXPRESS OR IMPLIED, ABOUT NON-INFRINGEMENT, MERCHANTABILITY OR FITNESS FOR A PARTICULAR PURPOSE OF THE PRODUCTS. BUYER ACKNOWLEDGES THAT IT ALONE HAS DETERMINED THAT THE PRODUCTS WILL SUITABLY MEET THE REQUIREMENTS OF THEIR INTENDED USE.

Omron further disclaims all warranties and responsibility of any type for claims or expenses based on infringement by the Products or otherwise of any intellectual property right. (c) Buyer Remedy. Omron's sole obligation hereunder shall be, at Omron's election, to (i) replace (in the form originally shipped with Buyer responsible for labor charges for removal or replacement thereof) the non-complying Product, (ii) repair the non-complying Product, or (iii) repay or credit Buyer an amount equal to the purchase price of the non-complying Product; provided that in no event shall Omron be responsible for warranty, repair, indemnity or any other claims or expenses regarding the Products unless Omron's analysis confirms that the Products were properly handled, stored, installed and maintained and not subject to contamination, abuse, misuse or inappropriate modification. Return of any Products by Buyer must be approved in writing by Omron before shipment. Omron Companies shall not be liable for the suitability or unsuitability or the results from the use of Products in combination with any electrical or electronic components, circuits, system assemblies or any other materials or substances or environments. Any advice, recommendations or information given orally or in writing, are not to be construed as an amendment or addition to the above warranty.

See http://www.omron.com/global/ or contact your Omron representative for published information.

Limitation on Liability; Etc.

OMRON COMPANIES SHALL NOT BE LIABLE FOR SPECIAL, INDIRECT, INCIDENTAL, OR CONSEQUENTIAL DAMAGES, LOSS OF PROFITS OR PRODUCTION OR COMMERCIAL LOSS IN ANY WAY CONNECTED WITH THE PRODUCTS, WHETHER SUCH CLAIM IS BASED IN CONTRACT, WARRANTY, NEGLIGENCE OR STRICT LIABILITY.

Further, in no event shall liability of Omron Companies exceed the individual price of the Product on which liability is asserted.

Suitability of Use.

Omron Companies shall not be responsible for conformity with any standards, codes or regulations which apply to the combination of the Product in the Buyer's application or use of the Product. At Buyer's request, Omron will provide applicable third party certification documents identifying ratings and limitations of use which apply to the Product. This information by itself is not sufficient for a complete determination of the suitability of the Product in combination with the end product, machine, system, or other application or use. Buyer shall be solely responsible for determining appropriateness of the particular Product with respect to Buyer's application, product or system. Buyer shall take application responsibility in all cases.

NEVER USE THE PRODUCT FOR AN APPLICATION INVOLVING SERIOUS RISK TO LIFE OR PROPERTY OR IN LARGE QUANTITIES WITHOUT ENSURING THAT THE SYSTEM AS A WHOLE HAS BEEN DESIGNED TO ADDRESS THE RISKS, AND THAT THE OMRON PRODUCT(S) IS PROPERLY RATED AND INSTALLED FOR THE INTENDED USE WITHIN THE OVERALL EQUIPMENT OR SYSTEM.

Programmable Products.

Omron Companies shall not be responsible for the user's programming of a programmable Product, or any consequence thereof.

Performance Data.

Data presented in Omron Company websites, catalogs and other materials is provided as a guide for the user in determining suitability and does not constitute a warranty. It may represent the result of Omron's test conditions, and the user must correlate it to actual application requirements. Actual performance is subject to the Omron's Warranty and Limitations of Liability.

Change in Specifications.

Product specifications and accessories may be changed at any time based on improvements and other reasons. It is our practice to change part numbers when published ratings or features are changed, or when significant construction changes are made. However, some specifications of the Product may be changed without any notice. When in doubt, special part numbers may be assigned to fix or establish key specifications for your application. Please consult with your Omron's representative at any time to confirm actual specifications of purchased Product.

Errors and Omissions.

Information presented by Omron Companies has been checked and is believed to be accurate; however, no responsibility is assumed for clerical, typographical or proofreading errors or omissions.

・Sysmac is a trademark or registered trademark of OMRON Corporation in Japan and other countries for OMRON factory automation products.
・Smartclick is a trademark or registered trademark of OMRON Corporation in Japan and other countries.
・CIP, EtherNet/IP™ and CIP Safety™ are trademarks of ODVA.
・Other company and product names mentioned herein are the trademarks or registered trademarks of their respective companies.

Note: Do not use this document to operate the Unit.

OMRON Corporation **Industrial Automation Company**

Kyoto, JAPAN **Contact : www.ia.omron.com**

Regional Headquarters

OMRON EUROPE B.V.
Wegalaan 67-69, 2132 JD Hoofddorp
The Netherlands
Tel: (31) 2356-81-300 Fax: (31) 2356-81-388

OMRON ELECTRONICS LLC
2895 Greenspoint Parkway, Suite 200
Hoffman Estates, IL 60169 U.S.A.
Tel: (1) 847-843-7900 Fax: (1) 847-843-7787

OMRON ASIA PACIFIC PTE. LTD.
438B Alexandra Road, #08-01/02 Alexandra
Technopark, Singapore 119968
Tel: (65) 6835-3011 Fax: (65) 6835-3011

OMRON INDUSTRIAL AUTOMATION (CHINA) CO., LTD.
19th Floor, Tower 2, Shanghai Landmark Center,
No. 88 North Sichuan Road,
Hongkou District, Shanghai, 200085, China
Tel: (86) 21-6023-0333

Authorized Distributor:

©OMRON Corporation 2026 All Rights Reserved.
In the interest of product improvement,
specifications are subject to change without notice.

CSM_12_1
Cat. No. T246-E1-12 1026 (1026)